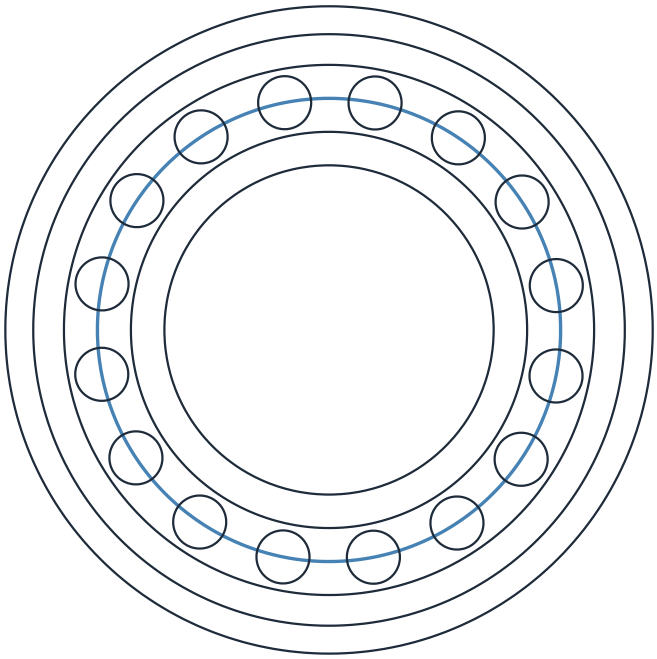

INA

Rolling Bearings HR 1 — Needle Roller Bearings

کاتالوگ رولبرینگ سوزنی INA

استعلام قیمت و خرید بلبرینگ INA ←

BRAND برند	ORIGIN کشور سازنده	PRODUCTS محصولات	PAGES تعداد صفحات	LANGUAGE زبان
INA	Germany	Needle roller bearings	202	German / English

moharekcharkhesh.com
MoharekCharkhesh@proton.me

تأمین‌کننده تخصصی بلبرینگ و رولبرینگ
تهران، خیابان امیرکبیر، کوچه ناظم‌الاطبا شمالی، پاساژ تهران، طبقه سوم، پلاک ۱۴۲

021 3399 8121
021 3399 8100
0912 464 6470

Needle roller and cage assemblies

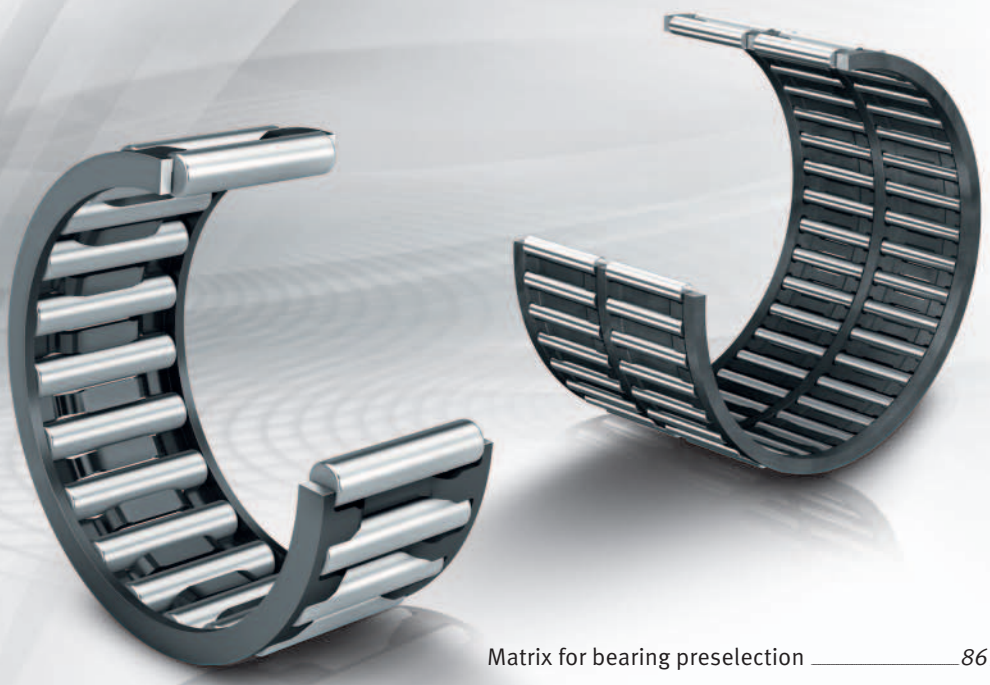

Matrix for bearing preselection ____ 867

1 Needle roller and cage assemblies ____ 868

1.1 Bearing designs ____ 868
1.2 Load carrying capacity ____ 873
1.3 Compensation of angular misalignments ____ 873
1.4 Lubrication ____ 874
1.5 Sealing ____ 874
1.6 Speeds ____ 874

1.7 Noise *874*
1.8 Temperature range *875*
1.9 Cages *875*
1.10 Internal clearance *875*
1.11 Dimensions, tolerances *876*
1.12 Suffixes *876*
1.13 Structure of bearing designation *876*
1.14 Dimensioning *877*
1.15 Minimum load *877*
1.16 Design of bearing arrangements *878*
1.17 Mounting and dismounting *881*
1.18 Legal notice regarding data freshness *881*
1.19 Further information *881*
Product table *882*
Needle roller and cage assemblies *882*

Matrix for bearing preselection

The matrix gives an overview of the types and design features.

It can be used to make a preliminary assessment of whether a bearing is fundamentally suitable for the envisaged application.

The additional information provided in the product chapter (see column "detailed information") and in the Technical principles must, however, be observed in addition to this overview in selection of the bearing.

Design features and suitability			Needle roller and cage assemblies	
+++ extremely suitable ++ highly suitable + suitable (+) suitable with restrictions – not suitable/not applicable ✓ available			single or double row	detailed information ➤ 868
Load carrying capacity	radial		+++	➤ 873 | 1.2
	axial, one direction		–	➤ 873 | 1.2
	axial, both directions		–	➤ 873 | 1.2
	moments		–	➤ 873 | 1.2
Compensation of angular misalignments	static		–	➤ 873 | 1.3
	dynamic		–	➤ 873 | 1.3
Bearing design	cylindrical bore		–	➤ 868 | 1.1
	tapered bore		–	➤ 868 | 1.1
	separable		–	➤ 881 | 1.17
Lubrication	greased		–	➤ 874 | 1.4
Sealing	open		✓	➤ 874 | 1.5
	non-contact		–	➤ 874 | 1.5
	contact		–	➤ 874 | 1.5
Operating temperature in °C	from to		–30 +140[1]	➤ 875 | 1.8
Suitability for	high speeds		+++	➤ 874 | 1.6
	high running accuracy		++	➤ 876 | 1.11 ➤ 115
	low-noise running		+	➤ 874 | 1.7 ➤ 27
	high rigidity		++	➤ 54
	reduced friction		+	➤ 56
	length compensation within bearing		–	
	non-locating bearing arrangement		++	➤ 141
	locating bearing arrangement		–	➤ 141
X-life bearings		X-life	–	
Enveloping circle diameter F_w in mm	from to		3 265	➤ 882
Product tables	from page ➤		882	

[1] Data valid for needle roller and cage assemblies with sheet steel cage and with cages made from copper-zinc alloy

1 Needle roller and cage assemblies

Radial needle roller and cage assemblies:
- are suitable for applications with a very small radial design envelope, where the raceways on the shaft and in the housing are designed as rolling bearing raceways (direct bearing arrangement)
- can support high radial loads
- allow high speeds
- combine the load carrying capacity advantages of full complement needle roller bearing arrangements with the speed advantages of a cage bearing
- have a high running accuracy
- result in rigid bearing arrangements
- are easy to mount
- permit technically straightforward, economical and cost-effective designs

For an overview of other product-specific features, see the Matrix for bearing preselection ➤*867*.

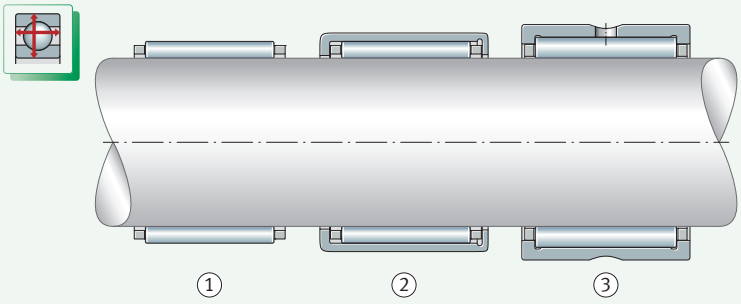

1
Radial needle roller and cage assembly – comparison of radial design envelope with drawn cup needle roller bearing with open ends and machined needle roller bearing

① *Radial needle roller and cage assembly*
② *Drawn cup needle roller bearing with open ends*
③ *Machined needle roller bearing*

1.1 Bearing designs

Design variants

Radial needle roller and cage assemblies:
- are available in the basic design (K) ➤*869*|*2* and ➤*870*|*3*
- are available for centrifugal forces and high acceleration forces (KZK, KBK) ➤*871*|*4*
- can be customised from profiled strip (K) ➤*872*|*6*

Needle roller and cage assemblies of basic design

Bearings with a very small radial section height

Needle roller and cage assemblies are part of the group of radial needle roller bearings. These ready-to-fit bearing arrangement elements comprise needle cages, which are fitted with needle rollers ➤*869*| *2* and ➤*870*| *1*. They are rolling bearings with a very small radial section height and, apart from full complement needle roller bearing arrangements, are the simplest design of radial needle roller bearing. However, while the design envelope is completely filled with loose needle rollers in full complement needle roller bearing arrangements and, depending on the position, the rolling elements are therefore in contact with each other, these are guided in the cage pockets in needle roller and cage assemblies. The pockets, which are separated from each other by bars and are uniformly distributed around the circumference of the cage, maintain the spacing of the rolling elements relative to each other. The cage and rolling elements thus create a ready-to-fit unit.

The needle rollers are guided parallel to the axis

In addition, the bars prevent sliding friction between adjacent rolling elements and guide the rolling elements parallel to the bearing axis in the load-free zone. Guidance parallel to the axis prevents skewing of the needle rollers in the load-free zone. Compared with full complement needle roller bearing arrangements, needle roller and cage assemblies are suitable for higher speeds. As a result, the cage compensates for the disadvantages of a full complement needle roller bearing arrangement.

For bearing arrangements with a particularly small radial design envelope

Standard needle roller sorts are used as needle rollers ➤*870*| *1*. Due to the absence of an inner and outer ring, the radial section height of the bearings is only equivalent to the diameter of the needle rollers. As a result, needle roller and cage assemblies are particularly suitable for applications requiring only a very small radial design envelope. The majority of the bearings are of a single row design ➤*869*| *2*. This variant has the prefix K.

Needle roller and cage assemblies are only functional once they have been fitted between the housing and shaft. In this case, the raceways must be designed as rolling bearing raceways ➤*878*| *1.16*.

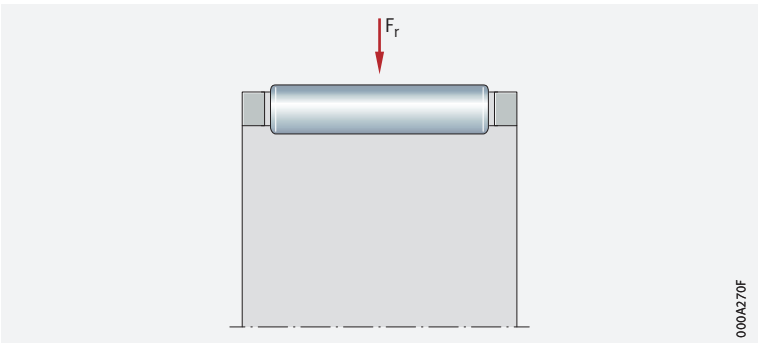

2
Single row needle roller and cage assembly

F_r = *radial load*

Double row needle roller and cage assemblies

Particularly high radial load carrying capacity

Double row needle roller and cage assemblies have a higher load carrying capacity than single row designs, but are correspondingly wider ➤*870*| *3*. These bearings have the prefix K and the suffix ZW and are only available in particular enveloping circle diameters F_w ➤*876*| *1.12* and ➤*882*|.

3
Double row needle roller and cage assembly

F_r = *radial load*

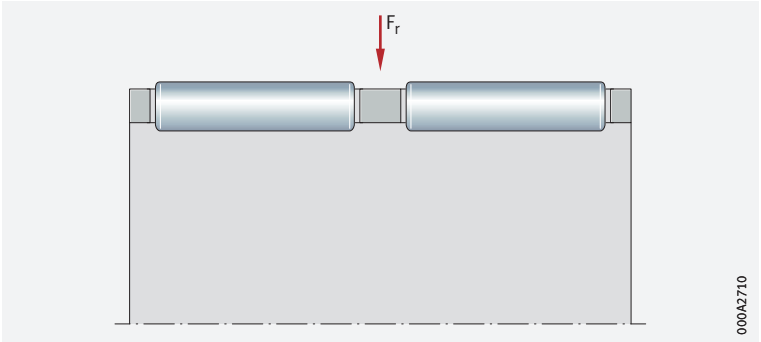

Needle rollers

Standard needle roller sorts are used as needle rollers

Needle roller and cage assemblies are supplied with standard needle roller sorts of grade G2 in accordance with the table ➤*870*| ▦ *1*. In all cases, needle rollers of only one sort are used in any one needle roller and cage assembly. The sort is printed on the packaging and colour coded ➤*870*| ▦ *1*. The sorts are designated by the upper and lower deviations (in µm), the diameter tolerance is a maximum of 2 µm. In each case, two neighbouring needle roller sorts are matched as sort pairs.

1
Dimensional and geometrical accuracy of needle rollers of grade G2

Grade	Deviations and tolerances for diameter D_w [1]							Length tolerance
	Deviation	Variation of needle roller diameter within a single sort	Sort pair colour code	Sorts		Roundness	Roughness	
		V_{DwL}				t_{Dw}	Ra	
	µm	µm		µm		µm	µm	
		max.				max.	max.	
G2	0 – 7	2	red	0 –2	–1 –3	1	0,1	h13
			blue	–2 –4	–3 –5			
			white (grey)	–4 –6	–5 –7			

[1] *The tolerance values apply to the centre point of the needle roller.*

Needle roller and cage assemblies for centrifugal forces and high acceleration forces (KZK, KBK)

Needle roller and cage assemblies for connecting rod bearing arrangements

Designed for piston pin and crank pin bearing arrangements

Needle roller and cage assemblies for connecting rod bearing arrangements are used in the crank mechanisms of 2 and 4 stroke combustion engines as well as in compressors, for supporting crank pins and piston pins ➤*871*| ◯ *4*. These cages support high centrifugal and acceleration forces and are suitable for high speeds.

For piston pin bearing arrangements, only needle roller and cage assemblies with the designation KZK and KBK may be used TPI 94. As catalogue needle roller and cage assemblies of type K are not designed to accommodate loads generated by centrifugal forces and high acceleration forces, non-compliance may result in failures.

The needle roller and cage assemblies for piston pin and crank pin bearing arrangements are described in detail in Technical Product Information TPI 94. This publication can be requested from Schaeffler.

4
Crank pin and piston pin bearing arrangement

① *Needle roller and cage assembly for crank pins, externally guided*
② *Needle roller and cage assembly for piston pins, internally guided*

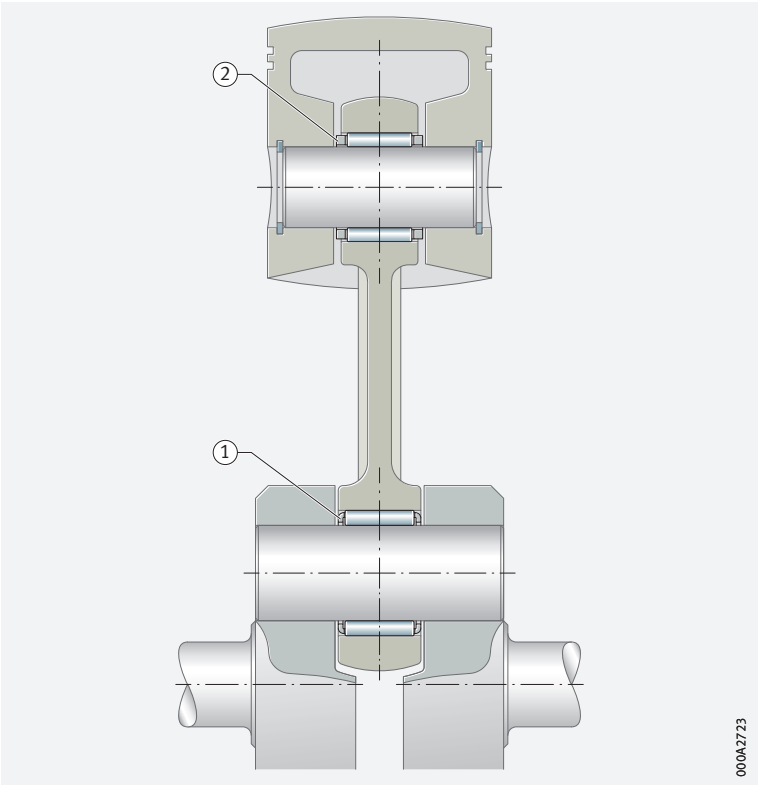

Needle roller and cage assemblies for crank pins (KZK)

Needle roller and cage assemblies for crank pins (series KZK) are externally guided, which means that the connecting rod bore guides the cage radially with little clearance ➤*871*|*4*. The radial movement of the cage in relation to the connecting rod bore and the rolling elements is as small as possible. The cages are made from quenched and tempered steel, have good wear resistance, high strength and large guidance surfaces which are designed for optimum lubrication.

Needle roller and cage assemblies for piston pins (KBK)

The needle roller and cage assemblies for piston pins (series KBK) are internally guided, which means that the piston pin guides the cage radially with little clearance ➤*871*|*4*. Due to the small radial internal clearance, tilting of the connecting rod is reduced to a minimum.
The bearings support high-frequency oscillating loads and are available for the majority of piston pin diameters in various widths, in accordance with the spacing between the piston centres. The low-wear steel cages are case hardened or quenched and tempered and have high strength.

Needle roller and cage assemblies for planetary gear bearing arrangements (KZK)

Needle roller and cage assemblies for planetary gear bearing arrangements

Needle roller and cage assemblies are also used for applications in planetary gear bearing arrangements, such as automatic gearboxes ➤*872*|*5*. As very high speeds, as well as centrifugal and acceleration forces, can occur in planetary gear bearing arrangements and the cage is therefore subject to high demands, the responsible Application Engineering and Design functions should select or design a suitable needle roller and cage assembly. In such cases, please consult Schaeffler.

5
Planetary gear bearing arrangement

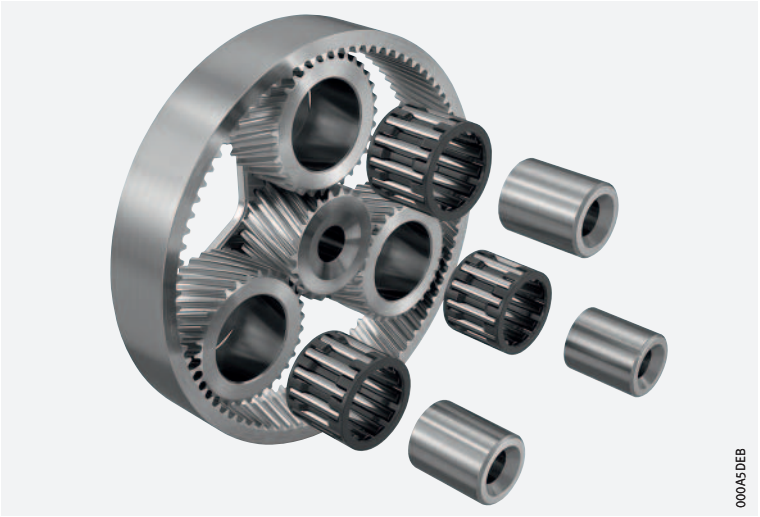

Needle roller and cage assemblies customised from profiled strip (K)

Customised radial needle roller and cage assemblies for specific requirements

These radial needle roller and cage assemblies are produced by bending flat cages BF and fitted with needle rollers after forming ➤*872*| *6*. As a result, it is possible to achieve simple designs of clearance-free bearing arrangements with high running accuracy, load carrying capacity and speed suitability, in combination with very small radial and axial section height. Due to their high radial runout accuracy, the bearings are also suitable for precision applications. Since the needle roller and cage assemblies are not tied to defined dimension series but can be precisely produced to a wide range of diameter values in accordance with the specific application (shaft diameter of 105 mm to 1000 mm), they are an economical alternative to catalogue standard bearings. They are normally supplied bent into their final shape but can also be formed by the customer from BF flat cages. After forming, there is an open joint ➤*872*| *6*. As a result, radial needle roller and cage assemblies can be easily mounted in recessed raceways. The function of the cages is not impaired by the opening.

BF flat cages and radial needle roller and cage assemblies produced from BF flat cages are described in detail in Technical Product Information TPI 203. This publication can be requested from Schaeffler.

6
Radial needle roller and cage assembly produced by bending from a flat cage BF

① *Open joint*



1.2 Load carrying capacity

Capable of supporting high radial loads, but not axial loads

Due to the line contact of the needle rollers, needle roller and cage assemblies are suitable for supporting high radial loads. In contrast to the ball, the needle has a larger contact area perpendicular to its axis. As a result, it can transmit higher forces, has greater rigidity and can support the same loads with smaller rolling element diameters. Due to the needle roller set, double row bearings have a particularly high radial load carrying capacity. They are used when the load carrying capacity of single row bearings is no longer sufficient.

Needle roller and cage assemblies cannot support axial forces ➤*877|1.14*. For axial loads, they can be combined with a bearing which is capable of supporting axial load, such as a deep groove ball bearing or a cylindrical roller bearing with axial load carrying capacity. In such cases, the axial bearing is arranged adjacent to the needle roller and cage assembly ➤*873|7*.

7
Passenger car gearbox: bearing arrangement of main shaft

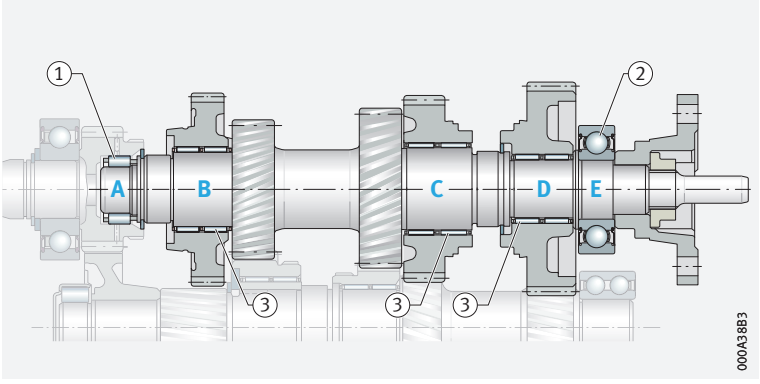

A – E = *bearing positions*

① *Cylindrical roller bearing and cage assembly as pilot bearing (non-locating bearing)*
② *Deep groove ball bearing (locating bearing, capable of supporting axial loads)*
③ *Needle roller and cage assemblies (non-locating bearing, capable of supporting radial loads only)*

1.3 Compensation of angular misalignments

The bearings are not suitable for the compensation of shaft misalignments relative to the housing bore

Needle roller and cage assemblies are not suitable for the compensation of angular misalignments. The extent to which a misalignment of the shaft can be tolerated relative to the housing bore is dependent on factors such as the design of the bearing arrangement, the size of the bearing, the operating clearance and the load. As a result, no guide value can be specified here for a possible misalignment.

In all cases, misalignments cause increased running noise, place increased strain on the cages and have a harmful influence on the operating life of the bearings.

1.4 Lubrication

Oil or grease lubrication is possible

Needle roller and cage assemblies are not greased. In order to prevent direct metallic contact between rolling elements, raceways and cages, they must be lubricated. Oil or grease lubrication is suitable.
The lubricant reduces the wear and also protects the surfaces against corrosion. The choice of lubricant is essentially dependent on the operating temperatures and speeds, but is also influenced by other factors.

The use of oil lubrication is preferred

For most applications involving needle roller and cage assemblies, oil should be used in preference as the lubricant.

Compatibility with plastic cages

When using bearings with plastic cages, compatibility between the lubricant and the cage material must be ensured if synthetic oils, lubricating greases with a synthetic oil base or lubricants containing a high proportion of EP additives are used.

Observe oil change intervals

Aged oil and additives in the oil can impair the operating life of plastics at high temperatures. As a result, stipulated oil change intervals must be strictly observed.

If there is any uncertainty regarding the suitability of the selected lubricant for the application, please consult Schaeffler or the lubricant manufacturer.

1.5 Sealing

The bearings are of an open design

Needle roller and cage assemblies are supplied without seals. As a result, sealing of the bearing position must be carried out in the adjacent construction. This must reliably prevent:

- moisture and contaminants from entering the bearing
- the egress of lubricant from the bearing position

1.6 Speeds

Speeds in the product tables

The product tables generally give two speeds for the bearings:

- the kinematic limiting speed n_G
- the thermal speed rating $n_{\vartheta r}$

Limiting speeds

The limiting speed n_G is the kinematically permissible speed of the bearing. Even under favourable mounting and operating conditions, this value should not be exceeded without prior consultation with Schaeffler ➤64.

The values in the product tables are valid for oil lubrication.

Values for grease lubrication

For grease lubrication, 60% of the value stated in the product tables is permissible in each case.

Reference speeds

$n_{\vartheta r}$ is used to calculate n_ϑ

The thermal speed rating $n_{\vartheta r}$ is not an application-oriented speed limit, but is a calculated ancillary value for determining the thermally safe operating speed n_ϑ ➤64.

1.7 Noise

Schaeffler Noise Index

The Schaeffler Noise Index (SGI) is not yet available for this bearing type ➤69. The data for these bearing series will be introduced and updated in stages.

Further information:

- ***medias*** *https://medias.schaeffler.com*

1.8 Temperature range

✎ *Limiting values*

The operating temperature of the bearings is limited by:

- the dimensional stability of the rolling elements
- the cage
- the lubricant

Possible operating temperatures of needle roller and cage assemblies ➤*875*|▦ *2*.

▦ **2** *Permissible temperature ranges*

Operating temperature	Needle roller and cage assemblies	
	with plastic cage	with sheet steel cage and with cages made from copper-zinc alloy
	–20 °C to +120 °C	–30 °C to +140 °C

In the event of anticipated temperatures which lie outside the stated values, please contact Schaeffler.

1.9 Cages

✎ *The standard cages are made from sheet steel*

The standard cages are made from sheet steel and, with an enveloping circle diameter $F_w \geqq 195$ mm, from a copper-zinc alloy. Bearings with a plastic cage are only available in particular sizes and have the suffix TV ➤*876*|▦ *3* and ➤*882*|▦. Other cages are available by agreement. With such cages, however, suitability for high speeds and temperatures as well as the basic load ratings may differ from the values for the bearings with standard cages.

For high continuous temperatures and applications with difficult operating conditions, bearings with sheet steel cages should be used. If there is any uncertainty regarding cage suitability, please consult Schaeffler.

1.10 Internal clearance

Radial internal clearance

✎ *Influencing factors on the radial internal clearance*

The radial internal clearance can be influenced by the needle roller sort as well as by the shaft and housing tolerances. When standard needle roller sorts are used, a radial internal clearance of C2 to CN is achieved (radial internal clearance for needle and cylindrical roller bearings to DIN 620-4), if the shaft and housing tolerances are observed ➤*878*|▦ *4* and normal operating conditions are present. If the actual dimensions have a plus tolerance, a radial internal clearance of 0 can be achieved.

Checking the enveloping circle diameter

✎ *F_w can only be checked in a mounted condition*

The outer and inner enveloping circle diameters E_w and F_w cannot be measured in an unmounted condition. As a result, the function of the bearings is checked using plug gauges and locating rings in accordance with the methods indicated in DIN 620-1/ISO 1132-2. In order to carry out the check, the needle roller and cage assemblies are placed in a locating ring, which corresponds to the specific nominal dimension E_w of the needle roller and cage assembly. The function of the needle roller and cage assembly is ensured if the plug gauge, which corresponds to the nominal dimension F_w, can be inserted and rotated without jamming.

1.11 Dimensions, tolerances

Dimension standards

The main dimensions of single row needler roller and cage assemblies correspond to DIN 5405-1:2016 and ISO 3030:2011, where standardised.

Tolerances

✎ *Needle rollers*

The needle rollers correspond to DIN 5402-3:2012 and ISO 3096:1996. The diameters of all needle rollers in a needle roller and cage assembly lie within the tolerance of 2 µm ➤*875*|▦ *2*.

✎ *Width B_c*

The deviations for cage width B_c are as follows for all needle roller and cage assemblies: B_c –0,2/–0,8 ➤*882*|▦.

1.12 Suffixes

Suffixes describe the design and features of a bearing in more detail.

▦ *3*
Suffixes and corresponding descriptions

Suffix	Description of suffix	
TV	Cage made from glass fibre reinforced polyamide PA66	Standard
ZW	Double row design (only available in certain enveloping circle diameters)	

1.13 Structure of bearing designation

With ***medias*** interchange, equivalent Schaeffler bearing designations can be determined for bearing designations from other rolling bearing manufacturers *https://www.schaeffler.de/std/1B69*.

The designation of bearings follows a set model. Examples ➤*876*|⧉ *8* and ➤*876*|⧉ *9*. The composition of designations is subject to DIN 623-1 ➤*102*|⧉ *10*.

⧉ *8*
Single row needle roller and cage assembly: designation structure

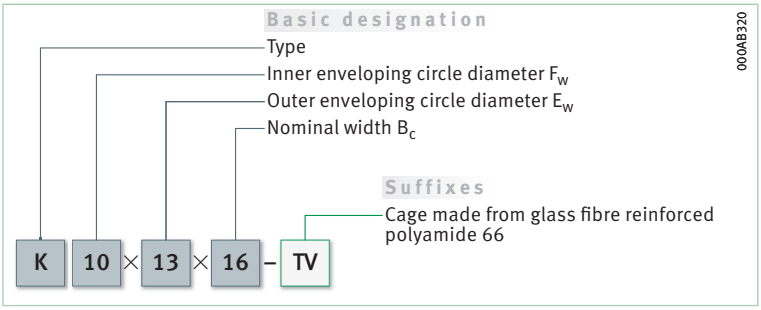

⧉ *9*
Double row needle roller and cage assembly: designation structure

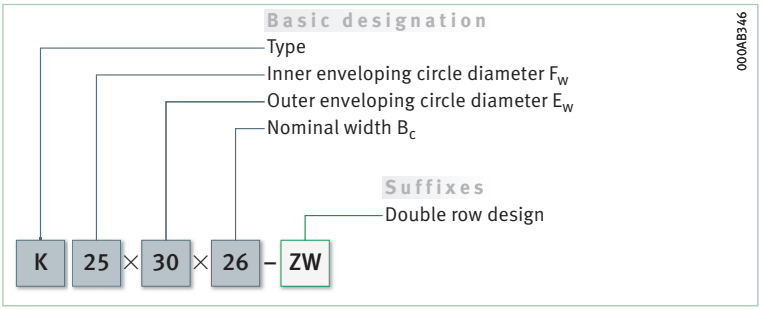

1.14 Dimensioning

Equivalent dynamic bearing load

✎ $P = F_r$ under purely radial load of constant magnitude and direction

The basic rating life equation $L = (C_r/P)^p$ used in the dimensioning of bearings under dynamic load assumes a load of constant magnitude and direction. In radial bearings, this is a purely radial load F_r. If this condition is met, the bearing load F_r is used in the rating life equation for P ($P = F_r$).

Needle roller and cage assemblies can only support radial loads. Thus, for these bearings ➤877| 1.

1 *Equivalent dynamic load*

$$P = F_r$$

Legend

P	N	Equivalent dynamic bearing load
F_r	N	Radial load.

Equivalent static bearing load

For needle roller and cage assemblies subjected to static load ➤877| 2.

2 *Equivalent static load*

$$P_0 = F_{0r}$$

Legend

P_0	N	Equivalent static bearing load
F_{0r}	N	Largest radial load present (maximum load).

Static load safety factor

✎ $S_0 = C_0/P_0$

In addition to the basic rating life L (L_{10h}), it is also always necessary to check the static load safety factor S_0 ➤877| 3.

3 *Static load safety factor*

$$S_0 = \frac{C_0}{P_0}$$

Legend

S_0	–	Static load safety factor
C_0	N	Basic static load rating
P_0	N	Equivalent static bearing load.

1.15 Minimum load

✎ In order to prevent damage due to slippage, a minimum radial load of $P > C_{0r}/60$ is required

In order that no slippage occurs between the contact partners, the needle roller and cage assemblies must be constantly subjected to a sufficiently high load. Based on experience, a minimum radial load of the order of $P > C_{0r}/60$ is thus necessary. In most cases, however, the radial load is already higher than the requisite minimum load due to the weight of the supported parts and the external forces.

If the minimum radial load is lower than indicated above, please consult Schaeffler.

1.16 Design of bearing arrangements

The shaft and housing design and the lateral restriction (axial location) of the bearing position is crucial to the correct function of needle roller and cage assemblies ➤878| 4, ➤879| 10 and ➤879| 11.

Raceways for bearings without bearing rings (direct bearing arrangement)

Produce the raceway as a rolling bearing raceway

If the needle roller and cage assemblies run directly on the shaft and/or in the housing bore (so-called direct bearing arrangement), then the raceway for the rolling elements on the shaft and in the housing must be produced as a rolling bearing raceway (hardened and ground). Design of raceways ➤878| 4. The surface hardness of the raceways must be 670 HV to 840 HV, the hardening depth CHD or SHD must be sufficiently large. The values in the table refer to commonly encountered application examples. If the shaft cannot be produced as a raceway, the needle roller and cage assemblies can be combined with Schaeffler bearing rings. However, the section height of the bearings will then be increased by the thickness of the rings.

4 *Tolerance classes and surface design of raceways for needle roller and cage assemblies (direct bearing arrangement)*

Shaft diameter Nominal dimension mm		Bore tolerance[1]	Shaft tolerance[1] Operating clearance			Design of raceway		
						Recommended mean roughness value Ramax (Rzmax)	Roundness tolerance	Parallelism tolerance
over	incl.		small	normal	large	µm	max.	max.
–	80	G6	j5	h5	g6	0,2 (1)	IT3	IT3
		H6	h5	g5	f6			
80	120	G6	h5	g5	f6	0,3 (1,6)		
120	–	G6	h5	g5	f6	0,4 (2,5)		
		H6	–	f5	e6			

[1] *The envelope requirement Ⓔ applies.*

Raceway width for direct bearing arrangement and axial running surfaces

Mounting dimensions for needle roller and cage assemblies and surface quality of the running surfaces

The raceway width must be at least equal to the nominal width B_c (B_c is produced with a (–) tolerance); values for B_c ➤882| and ➤879| 10. The spacing between the axial running surfaces of the cage must be sufficiently large. The spacing dimension for running surfaces is given as B_c H12 Ⓔ, in order to avoid jamming of the needle roller and cage assemblies (H12 in accordance with ISO 286-2).
The lateral running surfaces for the needle roller and cage assemblies must be designed as precision machined (Ramax 2 recommended) and wear-resistant ➤879| 10. Interruptions in the running surfaces should be avoided.

Example

For a design envelope of B_c = 10 mm, a needle roller and cage assembly with the nominal width B_c = 10 mm is suitable, as the maximum cage width is 9,8 (0/–0,6) mm.

10
Raceway width and axial running surfaces for needle roller and cage assemblies

B_c H12 = *nominal width*
B_c –0,2/–0,8 = *cage width*
Ramax = *maximum roughness of running surfaces*

① *Location by means of shaft shoulder, axial washer and snap ring*
② *Axial washer*
③ *Snap ring*

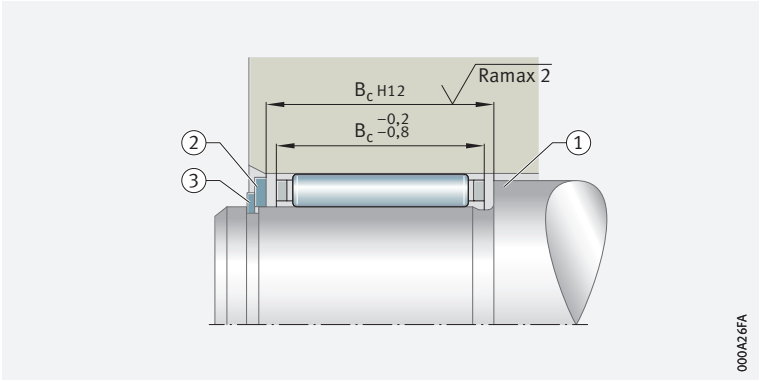

Axial guidance and location of needle roller and cage assemblies

Guidance can be provided by the shaft or on the housing

Needle roller and cage assemblies must be axially guided and located. Guidance can be provided by the shaft or on the housing ➤*879*| *10* and ➤*879*| *11*. Snap rings or an appropriately designed adjacent construction are suitable for this purpose. If location is by means of snap rings or retaining rings, a washer must be arranged in front of the rings ➤*879*| *10*. The overlap between the ring and washer must be sufficiently large.

11
Axial location by means of housing parts (lateral guidance on housing)

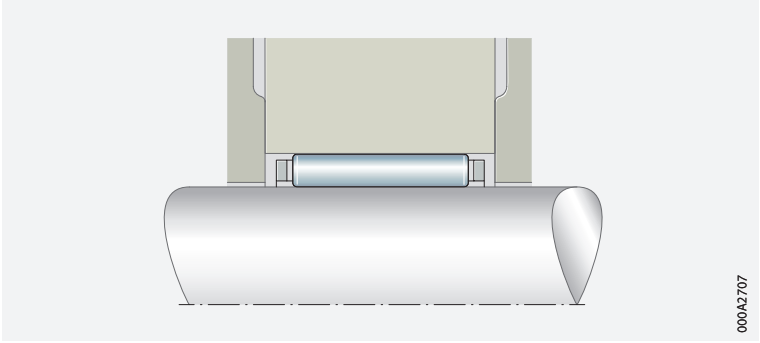

Steels for the raceway (direct bearing arrangement)

Through hardening steels

Through hardening steels in accordance with ISO 683-17 (e.g. 100Cr6) are suitable as materials for rolling bearing raceways in direct bearing arrangements. These steels can also be surface layer hardened.

Case hardening steels

Case hardening steels must correspond to DIN EN ISO 683-17 (such as 17MnCr5, 18CrNiMo7-6) or DIN EN ISO 683-3 (such as 16MnCr5).

Steels for inductive surface layer hardening

For flame and induction hardening, steels in accordance with DIN EN ISO 683-17 (e.g. C56E2, 43CrMo4) or DIN 17212 (e.g. Cf53) should be used.

Raceway hardness of less than 670 HV

If the raceway fulfils the requirements for rolling bearing materials but the raceway hardness is less than 670 HV (58 HRC), the static and dynamic load carrying capacity of the bearing is reduced. In order to determine the dynamic and static load carrying capacity of the bearing arrangement, the basic dynamic load rating C of the bearings must be multiplied by the reduction factor f_H (dynamic hardness factor) and the basic static load rating C_{0r} by the reduction factor f_{H0} (static hardness factor).

12
Dynamic hardness factor for raceway hardness values of less than 670 HV

f_H = *dynamic hardness factor*
HV, HRC = *surface hardness*

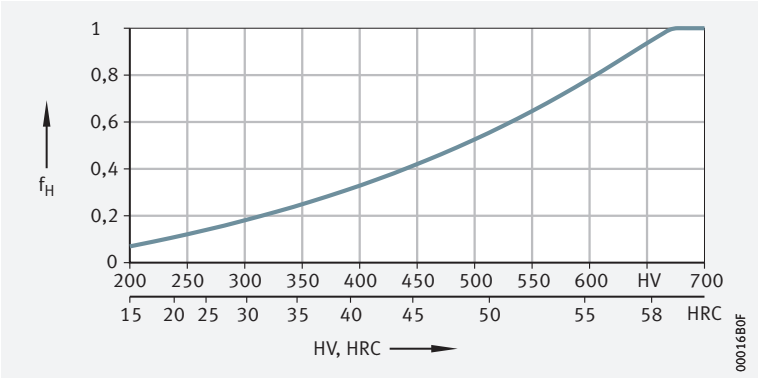

13
Static hardness factor for raceway hardness values of less than 670 HV

f_{H0} = *static hardness factor*
HV, HRC = *surface hardness*

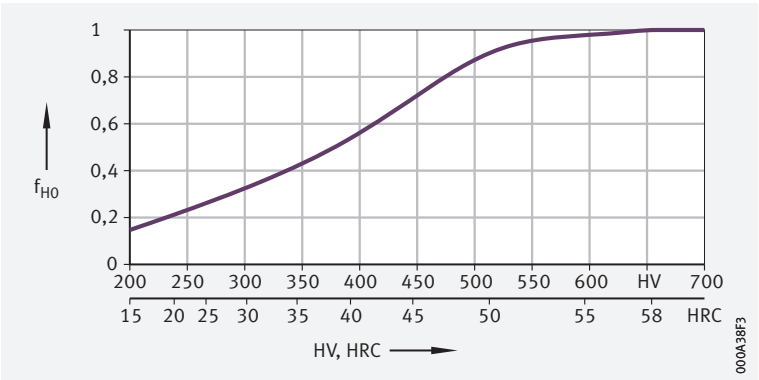

Determining the case hardening depth

Approximation value for case hardening depth

The reference value for the load present is the equivalent stress in accordance with the distortion energy hypothesis (DEH) as a function of the rolling element diameter D_w and the magnitude of the load.

For calculation of the case hardening depth CHD, the following applies:

f 4
Case hardening depth

$$CHD \geqq 0{,}052 \cdot D_w$$

Legend

CHD	mm	Case hardening depth
D_w	mm	Rolling element diameter.

The local hardness must always be above the local requisite hardness, which can be calculated from the equivalent stress.

Determining the surface hardening depth

In these surface hardening methods, the load and contact geometry must be taken into consideration when determining the requisite hardening depth.

For the calculation of the surface hardening depth SHD applies:

f 5
Surface hardening depth

$$SHD \geqq 140 \cdot D_w / R_{p0,2}$$

Legend

SHD	mm	Surface hardening depth
D_w	mm	Rolling element diameter
$R_{p0,2}$	N/mm^2	Yield point of base material.

Paired arrangement of needle roller and cage assemblies

The needle rollers must correspond to the same tolerance sort

If two needle roller and cage assemblies are arranged immediately adjacent to each other, it must be ensured that the bearings are loaded uniformly. In this case, the needle rollers used in these needle roller and cage assemblies must belong to the same diameter sort (tolerance sort). The dimensions of the needle rollers fitted in the bearings must be indicated on the specific bearing packaging.

1.17 Mounting and dismounting

Ensure that the bearings are not damaged during mounting

Needle roller and cage assemblies are either slid onto the shaft and then inserted in the housing or are mounted in the housing and the shaft is then inserted. Mounting is carried out without load and using a screwdriver type motion.

Schaeffler Mounting Handbook

Rolling bearings must be handled with great care

Rolling bearings are well-proven precision machine elements for the design of economical and reliable bearing arrangements, which offer high operational security. In order that these products can function correctly and achieve the envisaged operating life without detrimental effect, they must be handled with care.

The Schaeffler Mounting Handbook MH 1 gives comprehensive information about the correct storage, mounting, dismounting and maintenance of rotary rolling bearings *https://www.schaeffler.de/std/1D53*. It also provides information which should be observed by the designer, in relation to the mounting, dismounting and maintenance of bearings, in the original design of the bearing position. This book is available from Schaeffler on request.

1.18 Legal notice regarding data freshness

The further development of products may also result in technical changes to catalogue products

Of central interest to Schaeffler is the further development and optimisation of its products and the satisfaction of its customers. In order that you, as the customer, can keep yourself optimally informed about the progress that is being made here and with regard to the current technical status of the products, we publish any product changes which differ from the printed version in our electronic product catalogue.

We therefore reserve the right to make changes to the data and illustrations in this catalogue. This catalogue reflects the status at the time of printing. More recent publications released by us (as printed or digital media) will automatically precede this catalogue if they involve the same subject. Therefore, please always use our electronic product catalogue to check whether more up-to-date information or modification notices exist for your desired product.

Link to electronic product catalogue

The following link will take you to the Schaeffler electronic product catalogue: *https://medias.schaeffler.com*.

1.19 Further information

In addition to the data in this chapter, the following chapters in Technical principles must also be observed in the design of bearing arrangements:

- Determining the bearing size ➤*34*
- Rigidity ➤*54*
- Friction and increases in temperature ➤*56*
- Speeds ➤*64*
- Bearing data ➤*97*
- Lubrication ➤*70*
- Sealing ➤*185*
- Design of bearing arrangements ➤*141*
- Mounting and dismounting ➤*194*

Needle roller and cage assemblies

Single row

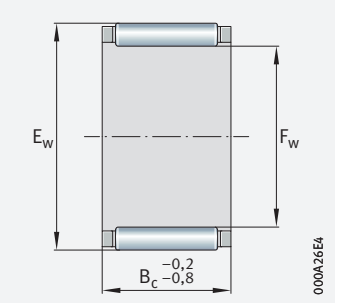

Single row

F_w = 3 – 19 mm

Main dimensions			Basic load ratings		Fatigue limit load	Limiting speed	Speed rating	Mass	Designation
F_w	E_w	B_c	dyn. C_r	stat. C_{0r}	C_{ur}	n_G	$n_{\vartheta r}$	m	➤*876*|*1.12* ➤*876*|*1.13*
			N	N	N	min^{-1}	min^{-1}	≈ g	
3	5	7	1 540	1 290	155	50 000	78 000	0,3	**K3×5×7-TV**
	5	9	1 710	1 480	192	50 000	80 000	0,4	**K3×5×9-TV**
	6	7	1 430	970	112	47 000	75 000	0,4	**K3×6×7-TV**
4	7	10	2 330	1 840	241	42 500	59 000	0,7	**K4×7×10-TV**
	7	7	1 740	1 270	148	42 500	59 000	0,5	**K4×7×7-TV**
5	8	10	3 000	2 650	360	39 000	47 000	0,9	**K5×8×10-TV**
	8	8	2 350	1 920	242	39 000	48 000	0,7	**K5×8×8-TV**
6	10	13	3 800	3 100	400	35 500	40 000	1,9	**K6×10×13-TV**
	9	10	3 350	3 150	425	36 500	40 000	1,1	**K6×9×10-TV**
	9	8	2 600	2 280	290	36 500	41 000	0,8	**K6×9×8-TV**
7	10	10	3 650	3 600	495	34 500	35 000	1	**K7×10×10-TV**
	10	8	2 850	2 650	335	34 500	36 000	0,9	**K7×10×8-TV**
	9	7	1 680	1 700	207	35 500	40 500	0,6	**K7×9×7-TV**
8	11	10	3 950	4 100	570	32 500	31 000	1,2	**K8×11×10-TV**
	11	13	5 100	5 800	800	32 500	30 500	1,7	**K8×11×13-TV**
	11	8	3 100	3 000	385	32 500	32 000	1	**K8×11×8-TV**
	12	10	5 000	4 700	570	31 500	29 000	2	**K8×12×10-TV**
9	12	10	4 500	5 000	690	31 000	27 500	1,5	**K9×12×10-TV**
	12	13	5 900	7 100	980	31 000	27 000	2,1	**K9×12×13-TV**
10	13	10	4 750	5 500	760	29 500	24 900	1,6	**K10×13×10-TV**
	13	13	6 200	7 800	1 080	29 500	24 400	2,3	**K10×13×13-TV**
	13	16	7 100	9 300	1 330	29 500	24 600	2,9	**K10×13×16-TV**
	14	10	5 800	6 000	730	29 000	23 500	2,5	**K10×14×10-TV**
	14	13	7 500	8 400	1 040	29 000	23 000	4,6	**K10×14×13-TV**
	16	12	8 100	7 200	1 020	27 500	21 800	5,5	**K10×16×12-TV**
12	15	10	4 900	6 100	840	27 000	21 500	2,9	**K12×15×10-TV**
	15	13	6 400	8 500	1 190	27 000	21 100	2,3	**K12×15×13-TV**
	16	13	8 000	9 400	1 170	26 500	19 900	3,6	**K12×16×13-TV**
	17	13	9 600	10 400	1 350	26 500	18 800	4,9	**K12×17×13-TV**
	18	12	10 000	9 900	1 430	26 000	18 100	6	**K12×18×12-TV**

medias *https://www.schaeffler.de/std/1F9A*

Main dimensions			Basic load ratings		Fatigue limit load	Limiting speed	Speed rating	Mass	Designation
F_w	E_w	B_c	dyn. C_r	stat. C_{0r}	C_{ur}	n_G	$n_{\vartheta r}$	m	➤876|1.12 ➤876|1.13
			N	N	N	min^{-1}	min^{-1}	≈ g	
14	18	10	7 100	8 500	1 070	25 000	17 300	4	**K14×18×10**
	18	13	8 200	10 100	1 340	25 000	17 700	6,5	**K14×18×13**
	18	15	9 500	12 300	1 570	25 000	17 400	5	**K14×18×15-TV**
	18	17	10 800	14 400	1 920	25 000	17 300	8	**K14×18×17**
	20	12	10 300	10 600	1 520	24 300	16 200	8,5	**K14×20×12**
15	18	17	8 000	12 100	1 760	24 600	17 700	4,6	**K15×18×17-TV**
	19	10	7 500	9 200	1 160	24 300	16 200	5	**K15×19×10**
	19	13	8 500	10 900	1 450	24 300	16 600	7	**K15×19×13**
	19	17	11 300	15 600	2 070	24 300	16 200	9,5	**K15×19×17**
	20	13	9 900	11 500	1 460	23 900	15 900	7	**K15×20×13**
	21	15	14 300	16 400	2 250	23 600	14 700	11	**K15×21×15**
	21	21	19 400	24 300	3 350	23 600	14 400	17	**K15×21×21**
16	20	10	7 800	9 900	1 250	23 600	15 200	5,5	**K16×20×10**
	20	13	8 900	11 800	1 560	23 600	15 600	7,5	**K16×20×13**
	20	17	11 700	16 800	2 230	23 600	15 200	10	**K16×20×17**
	22	12	11 500	12 500	1 810	22 900	14 300	10	**K16×22×12**
	22	16	14 800	17 500	2 430	22 900	14 100	12	**K16×22×16**
	22	20	18 300	22 800	3 100	22 900	14 000	17	**K16×22×20**
	24	20	21 400	23 500	3 000	22 400	13 200	22	**K16×24×20**
17	21	10	8 100	10 600	1 340	22 900	14 400	5,5	**K17×21×10**
	21	13	10 400	14 600	1 840	22 900	14 100	6,5	**K17×21×13**
	21	17	12 200	17 900	2 390	22 900	14 400	9,5	**K17×21×17**
18	22	10	8 400	11 300	1 430	22 400	13 600	6	**K18×22×10**
	22	13	9 200	12 700	1 680	22 400	14 200	8	**K18×22×13**
	22	17	12 100	18 000	2 400	22 400	13 900	11	**K18×22×17**
	24	12	12 800	14 900	2 160	21 800	12 700	12	**K18×24×12**
	24	13	13 100	15 300	2 030	21 800	12 900	13	**K18×24×13**
	24	20	20 200	27 000	3 600	21 800	12 400	18	**K18×24×20**
	25	22	23 100	29 000	3 800	21 600	12 200	23	**K18×25×22**
19	23	13	9 500	13 500	1 790	21 800	13 500	8	**K19×23×13**
	23	17	12 500	19 200	2 550	21 800	13 200	11	**K19×23×17**

medias *https://www.schaeffler.de/std/1F9A*

Needle roller and cage assemblies

Single row
Double row

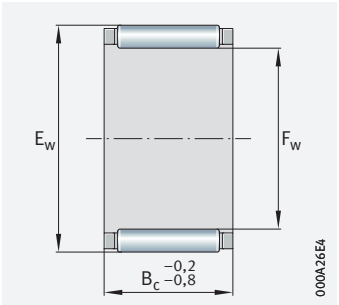

Single row

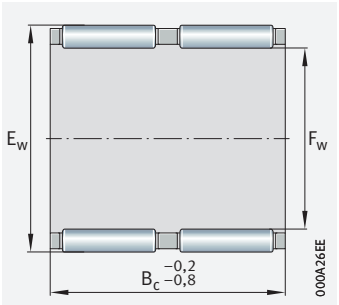

Double row (K..-ZW)

F_w = 20 – 30 mm

Main dimensions			Basic load ratings		Fatigue limit load	Limiting speed	Speed rating	Mass	Designation
F_w	E_w	B_c	dyn. C_r	stat. C_{0r}	C_{ur}	n_G	$n_{\vartheta r}$	m	➤876|1.12 ➤876|1.13
			N	N	N	min^{-1}	min^{-1}	≈ g	
20	24	10	8 900	12 600	1 600	21 300	12 400	6,5	**K20×24×10**
	24	13	9 800	14 300	1 900	21 300	12 800	9	**K20×24×13**
	24	17	12 900	20 400	2 700	21 300	12 500	12	**K20×24×17**
	26	12	13 400	16 200	2 350	20 900	11 700	11	**K20×26×12**
	26	13	14 400	17 900	2 380	20 900	11 600	12	**K20×26×13**
	26	17	19 200	26 000	3 350	20 900	11 200	16	**K20×26×17**
	26	20	21 100	29 000	3 950	20 900	11 400	19	**K20×26×20**
	28	16	19 800	22 400	3 050	20 400	11 100	20	**K20×28×16**
	28	20	23 900	28 500	3 650	20 400	11 100	27	**K20×28×20**
	28	25	30 500	39 000	5 400	20 400	10 800	32	**K20×28×25**
	30	30	35 500	41 500	5 600	19 600	10 800	49	**K20×30×30**
21	25	13	10 100	15 100	2 010	20 900	12 300	9	**K21×25×13**
22	26	10	9 100	13 400	1 700	20 400	11 500	7,5	**K22×26×10**
	26	13	10 400	15 900	2 120	20 400	11 800	9,5	**K22×26×13**
	26	17	13 700	22 700	3 050	20 400	11 500	12	**K22×26×17**
	28	17	19 400	27 000	3 500	19 600	10 500	18	**K22×28×17**
	29	16	20 000	25 500	3 450	19 200	10 300	16	**K22×29×16**
	30	15	20 100	23 400	3 100	18 800	10 200	18	**K22×30×15-TV**
	32	24	34 000	40 000	5 000	18 100	9 700	43	**K22×32×24**
23	35	16	24 500	23 900	3 050	16 900	9 500	29	**K23×35×16-TV**
24	28	10	9 600	14 800	1 870	18 800	10 600	8,5	**K24×28×10**
	28	13	11 000	17 600	2 330	18 800	10 800	10	**K24×28×13**
	28	17	14 500	25 000	3 350	18 800	10 600	13	**K24×28×17**
	30	17	19 500	27 500	3 600	18 100	10 000	19	**K24×30×17**
	30	31	27 500	43 500	5 900	18 100	10 400	32	**K24×30×31-ZW**

medias *https://www.schaeffler.de/std/1F9A*

Main dimensions			Basic load ratings		Fatigue limit load	Limiting speed	Speed rating	Mass	Designation
F_w	E_w	B_c	dyn. C_r	stat. C_{0r}	C_{ur}	n_G	$n_{\vartheta r}$	m	➤*876*|*1.12* ➤*876*|*1.13*
			N	N	N	min^{-1}	min^{-1}	≈ g	
25	29	10	9 900	15 400	1 960	18 100	10 200	8,5	**K25×29×10**
	29	13	11 300	18 400	2 440	18 100	10 400	11	**K25×29×13**
	29	17	14 900	26 000	3 500	18 100	10 200	14	**K25×29×17**
	30	13	14 600	21 800	2 850	17 800	9 800	12	**K25×30×13**
	30	17	18 700	30 000	3 900	17 800	9 600	16	**K25×30×17**
	30	20	21 700	36 500	4 950	17 800	9 500	18	**K25×30×20**
	30	26	21 400	35 500	4 550	17 800	10 400	19	**K25×30×26-ZW**
	31	17	19 600	28 500	3 650	17 500	9 600	19	**K25×31×17**
	31	21	24 700	38 000	5 200	17 500	9 400	20	**K25×31×21**
	32	16	20 800	27 500	3 750	17 200	9 400	21	**K25×32×16**
	33	20	28 500	38 000	4 950	16 900	9 000	33	**K25×33×20**
	33	24	34 000	47 000	6 500	16 900	8 900	39	**K25×33×24**
	35	30	47 000	62 000	8 400	16 300	8 500	65	**K25×35×30**
26	30	13	11 600	19 200	2 550	17 500	10 100	11	**K26×30×13**
	30	17	15 200	27 500	3 650	17 500	9 800	15	**K26×30×17**
	30	22	15 700	28 500	3 600	17 500	10 400	12	**K26×30×22-ZW**
28	33	13	15 300	24 200	3 150	16 100	8 900	13	**K28×33×13**
	33	17	19 700	33 500	4 350	16 100	8 700	17	**K28×33×17**
	34	17	21 800	33 500	4 350	15 800	8 600	24	**K28×34×17**
	35	16	21 500	29 500	4 000	15 600	8 700	24	**K28×35×16**
	35	18	24 000	34 000	4 800	15 600	8 600	27	**K28×35×18**
	40	25	45 500	55 000	6 800	14 400	7 700	70	**K28×40×25**
30	34	13	12 300	21 700	2 900	15 300	8 900	14	**K30×34×13**
	35	13	15 600	25 500	3 350	15 100	8 400	14	**K30×35×13**
	35	17	19 600	34 000	4 350	15 100	8 300	19	**K30×35×17**
	35	27	30 500	59 000	8 600	15 100	8 100	30	**K30×35×27**
	37	16	23 100	33 500	4 550	14 600	8 000	27	**K30×37×16**
	37	18	26 000	38 500	5 400	14 600	8 000	30	**K30×37×18**
	40	18	32 000	40 000	5 100	14 000	7 600	48	**K30×40×18**
	40	30	49 000	69 000	9 400	14 000	7 500	73	**K30×40×30**

medias *https://www.schaeffler.de/std/1F9A*

Needle roller and cage assemblies

Single row
Double row

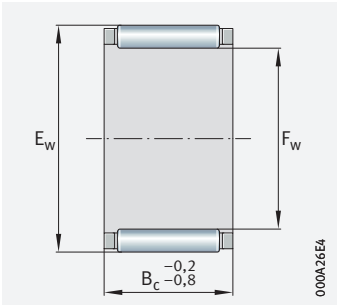

Single row

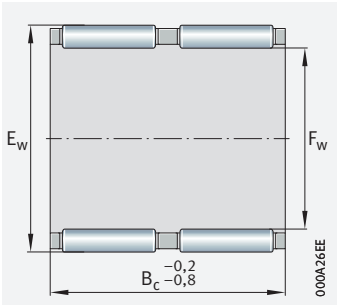

Double row (K..-ZW)

F_w = 32 – 47 mm

Main dimensions			Basic load ratings		Fatigue limit load	Limiting speed	Speed rating	Mass	Designation
F_w	E_w	B_c	dyn. C_r	stat. C_{0r}	C_{ur}	n_G	$n_{\vartheta r}$	m	➤*876*|*1.12* ➤*876*|*1.13*
			N	N	N	min^{-1}	min^{-1}	≈ g	
32	37	13	15 500	25 500	3 350	14 200	8 100	18	**K32×37×13**
	37	17	19 900	35 500	4 600	14 200	7 900	19	**K32×37×17**
	37	27	30 000	60 000	8 600	14 200	7 800	30	**K32×37×27**
	38	20	26 500	45 000	6 100	14 000	7 700	30	**K32×38×20**
	39	16	23 800	35 500	4 800	13 800	7 600	37	**K32×39×16**
	39	18	26 500	41 000	5 700	13 800	7 500	31	**K32×39×18**
	40	25	37 500	58 000	8 000	13 600	7 400	49	**K32×40×25**
	40	42	50 000	84 000	10 700	13 600	7 800	77	**K32×40×42-ZW-TV**
	46	32	66 000	84 000	11 300	12 600	6 700	119	**K32×46×32**
35	40	13	16 200	28 000	3 650	13 100	7 500	19	**K35×40×13**
	40	17	20 800	38 500	5 000	13 100	7 400	21	**K35×40×17**
	40	25	29 500	60 000	8 500	13 100	7 200	31	**K35×40×25**
	40	27	25 000	48 500	6 800	13 100	7 900	39	**K35×40×27-TV**
	42	16	24 400	37 500	5 100	12 700	7 100	34	**K35×42×16**
	42	18	27 500	43 000	6 100	12 700	7 100	34	**K35×42×18**
	42	20	30 000	49 000	6 300	12 700	7 000	37	**K35×42×20**
	42	30	39 000	68 000	9 500	12 700	7 200	67	**K35×42×30**
	45	20	37 000	50 000	6 600	12 300	6 800	56	**K35×45×20**
	45	30	53 000	79 000	10 700	12 300	6 700	80	**K35×45×30**
37	42	17	22 400	43 000	5 600	12 400	6 900	22	**K37×42×17**
38	43	17	20 500	38 500	4 950	12 100	7 000	29	**K38×43×17**
	43	27	31 500	68 000	9 700	12 100	6 800	43	**K38×43×27**
	46	20	35 500	57 000	7 300	11 700	6 300	47	**K38×46×20**
	46	32	55 000	99 000	14 400	11 700	6 200	76	**K38×46×32**
39	44	26	27 500	56 000	7 200	11 800	7 000	45	**K39×44×26-ZW**

medias *https://www.schaeffler.de/std/1F9A*

Main dimensions			Basic load ratings		Fatigue limit load	Limiting speed	Speed rating	Mass	Designation
F_w	E_w	B_c	dyn. C_r	stat. C_{0r}	C_{ur}	n_G	$n_{\vartheta r}$	m	➤*876*|*1.12* ➤*876*|*1.13*
			N	N	N	min^{-1}	min^{-1}	≈ g	
40	45	13	17 600	32 500	4 250	11 500	6 600	22	**K40×45×13**
	45	17	21 400	41 500	5 300	11 500	6 700	31	**K40×45×17**
	45	27	33 000	73 000	10 500	11 500	6 500	46	**K40×45×27**
	47	18	29 500	50 000	7 000	11 300	6 300	39	**K40×47×18**
	47	20	32 500	57 000	7 300	11 300	6 200	42	**K40×47×20**
	48	20	36 000	59 000	7 700	11 100	6 100	49	**K40×48×20**
42	47	13	17 800	33 500	4 400	11 000	6 400	18	**K42×47×13**
	47	17	21 700	43 000	5 500	11 000	6 400	32	**K42×47×17**
	47	30	33 500	76 000	10 200	11 000	6 400	54	**K42×47×30-ZW**
	50	20	35 000	57 000	7 400	10 700	6 000	53	**K42×50×20**
43	48	17	21 600	43 000	5 500	10 800	6 300	30	**K43×48×17**
	48	27	33 500	75 000	10 800	10 800	6 200	50	**K43×48×27**
45	50	17	22 500	46 000	5 900	10 300	6 100	34	**K45×50×17**
	50	27	34 500	80 000	11 600	10 300	5 900	51	**K45×50×27**
	52	18	31 500	57 000	8 000	10 100	5 700	42	**K45×52×18**
	53	20	39 000	67 000	8 800	10 000	5 500	55	**K45×53×20**
	53	21	38 500	67 000	8 800	10 000	5 600	60	**K45×53×21**
	53	28	52 000	98 000	13 900	10 000	5 400	81	**K45×53×28**
	59	18	44 500	54 000	7 000	9 400	5 400	72	**K45×59×18-TV**
	59	32	73 000	103 000	14 000	9 400	5 300	148	**K45×59×32**
47	52	17	23 300	49 000	6 300	9 900	5 800	35	**K47×52×17**
	52	27	35 000	83 000	12 000	9 900	5 700	51	**K47×52×27**

medias *https://www.schaeffler.de/std/1F9A*

Needle roller and cage assemblies

Single row
Double row

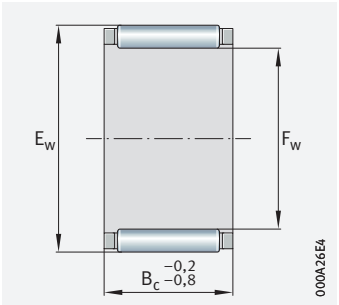

Single row

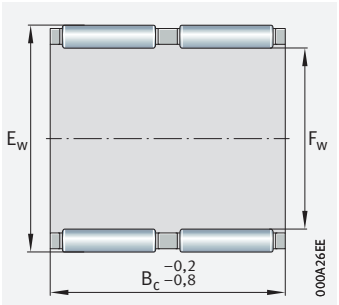

Double row (K..-ZW)

F_w = 50 – 95 mm

Main dimensions			Basic load ratings		Fatigue limit load	Limiting speed	Speed rating	Mass	Designation
F_w	E_w	B_c	dyn. C_r	stat. C_{0r}	C_{ur}	n_G	$n_{\vartheta r}$	m	➤*876|1.12* ➤*876|1.13*
			N	N	N	min^{-1}	min^{-1}	≈ g	
50	55	13,5	18 200	36 500	4 700	9 300	5 700	30	**K50×55×13,5**
	55	17	26 000	57 000	7 500	9 300	5 300	35	**K50×55×17**
	55	20	26 500	60 000	7 900	9 300	5 500	43	**K50×55×20**
	55	30	39 000	97 000	14 100	9 300	5 400	65	**K50×55×30**
	57	18	33 500	63 000	9 000	9 200	5 200	47	**K50×57×18**
	58	20	35 500	62 000	8 900	9 100	5 400	75	**K50×58×20**
	58	25	44 000	81 000	11 000	9 100	5 300	90	**K50×58×25**
52	57	12	18 000	36 500	4 700	9 000	5 400	24	**K52×57×12**
55	60	20	28 500	66 000	8 800	8 500	5 100	40	**K55×60×20**
	60	27	38 000	97 000	13 800	8 500	4 950	60	**K55×60×27**
	60	30	41 000	108 000	15 700	8 500	4 950	71	**K55×60×30**
	62	18	35 500	70 000	9 900	8 400	4 750	52	**K55×62×18**
	63	20	40 000	74 000	9 700	8 300	4 800	67	**K55×63×20**
	63	25	50 000	100 000	13 900	8 300	4 700	80	**K55×63×25**
	63	32	62 000	130 000	18 900	8 300	4 650	102	**K55×63×32**
58	65	18	35 000	70 000	10 000	8 000	4 650	52	**K58×65×18**
	65	36	49 000	107 000	14 900	8 000	5 100	127	**K58×65×36-ZW**
60	65	20	29 500	72 000	9 500	7 800	4 750	52	**K60×65×20**
	65	30	42 500	116 000	16 900	7 800	4 650	77	**K60×65×30**
	66	33	46 000	112 000	15 400	7 800	4 800	104	**K60×66×33-ZW**
	66	40	58 000	151 000	20 200	7 800	4 650	116	**K60×66×40-ZW**
	68	20	43 500	85 000	11 200	7 700	4 400	71	**K60×68×20**
	68	23	49 500	101 000	13 800	7 700	4 350	94	**K60×68×23**
	68	25	53 000	111 000	15 500	7 700	4 350	89	**K60×68×25**
	68	30	44 500	88 000	11 500	7 700	4 950	129	**K60×68×30-ZW**
	75	42	118 000	199 000	27 500	7 300	4 050	240	**K60×75×42**
62	70	40	66 000	146 000	20 900	7 400	4 550	174	**K62×70×40-ZW**
64	70	16	28 000	60 000	8 300	7 300	4 500	53	**K64×70×16**

medias *https://www.schaeffler.de/std/1F9A*

Main dimensions			Basic load ratings		Fatigue limit load	Limiting speed	Speed rating	Mass	Designation
F_w	E_w	B_c	dyn. C_r	stat. C_{0r}	C_{ur}	n_G	$n_{\vartheta r}$	m	➤*876*|*1.12* ➤*876*|*1.13*
			N	N	N	min^{-1}	min^{-1}	≈ g	
65	70	20	30 500	77 000	10 200	7 300	4 450	56	**K65×70×20**
	70	30	44 000	124 000	18 100	7 300	4 350	83	**K65×70×30**
	73	23	46 000	94 000	12 400	7 100	4 300	108	**K65×73×23**
	73	30	57 000	123 000	17 400	7 100	4 300	141	**K65×73×30**
68	74	20	35 500	84 000	11 200	6 900	4 200	71	**K68×74×20**
	74	30	46 500	118 000	17 200	6 900	4 300	100	**K68×74×30**
	74	35	48 500	125 000	17 500	6 900	4 450	120	**K68×74×35-ZW**
70	76	20	36 000	86 000	11 500	6 700	4 100	71	**K70×76×20**
	76	30	52 000	139 000	20 400	6 700	4 000	110	**K70×76×30**
	78	30	60 000	135 000	19 100	6 600	4 000	148	**K70×78×30**
72	80	20	41 500	85 000	12 200	6 400	4 000	98	**K72×80×20**
73	79	20	37 000	90 000	12 000	6 400	4 000	75	**K73×79×20**
75	81	20	37 500	94 000	12 600	6 300	3 850	79	**K75×81×20**
	81	30	52 000	143 000	20 700	6 300	3 850	114	**K75×81×30**
	83	23	50 000	109 000	14 400	6 200	3 800	124	**K75×83×23**
	83	30	62 000	143 000	20 300	6 200	3 800	147	**K75×83×30**
	83	35	63 000	147 000	20 300	6 200	3 950	182	**K75×83×35-ZW**
	83	40	73 000	177 000	25 500	6 200	3 900	211	**K75×83×40-ZW**
80	86	20	38 500	98 000	13 100	5 900	3 700	60	**K80×86×20**
	88	30	71 000	176 000	25 500	5 800	3 400	138	**K80×88×30**
	88	40	76 000	192 000	27 500	5 800	3 700	227	**K80×88×40-ZW**
	88	46	88 000	231 000	30 500	5 800	3 650	260	**K80×88×46-ZW**
85	92	20	44 500	108 000	15 400	5 500	3 450	102	**K85×92×20**
90	97	20	45 000	113 000	16 100	5 200	3 300	109	**K90×97×20**
	98	27	61 000	150 000	20 600	5 200	3 300	150	**K90×98×27**
	98	30	68 000	172 000	24 400	5 200	3 300	172	**K90×98×30**
95	103	30	69 000	180 000	25 500	4 950	3 150	165	**K95×103×30**
	103	40	83 000	228 000	33 000	4 950	3 200	266	**K95×103×40-ZW**

medias *https://www.schaeffler.de/std/1F9A*

Needle roller and cage assemblies

Single row

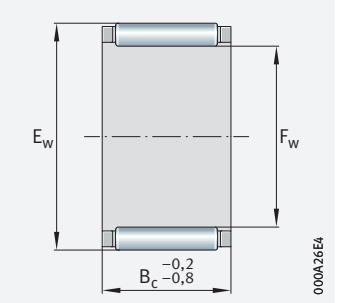

Single row

F_w = 100 – 265 mm

Main dimensions			Basic load ratings		Fatigue limit load	Limiting speed	Speed rating	Mass	Designation
F_w	E_w	B_c	dyn. C_r	stat. C_{0r}	C_{ur}	n_G	$n_{\vartheta r}$	m	➤*876*|*1.12* ➤*876*|*1.13*
			N	N	N	min^{-1}	min^{-1}	≈ g	
100	107	21	48 000	127 000	17 900	4 750	3 100	120	**K100×107×21**
	108	27	57 000	143 000	19 200	4 700	3 200	185	**K100×108×27**
	108	30	71 000	188 000	26 500	4 700	3 050	180	**K100×108×30**
105	112	21	47 500	127 000	17 700	4 500	3 000	129	**K105×112×21**
110	117	24	56 000	158 000	20 200	4 300	2 850	172	**K110×117×24**
	118	30	78 000	219 000	30 000	4 300	2 750	217	**K110×118×30**
115	123	27	63 000	170 000	22 000	4 100	2 850	200	**K115×123×27**
120	127	24	59 000	174 000	21 800	3 950	2 650	165	**K120×127×24**
125	133	35	86 000	260 000	35 000	3 800	2 600	275	**K125×133×35**
130	137	24	61 000	186 000	22 700	3 650	2 500	170	**K130×137×24**
135	143	35	91 000	290 000	38 000	3 550	2 390	300	**K135×143×35**
145	153	26	74 000	225 000	27 500	3 300	2 280	262	**K145×153×26**
150	160	46	147 000	470 000	61 000	3 150	2 100	570	**K150×160×46**
155	163	26	75 000	236 000	28 500	3 100	2 180	265	**K155×163×26**
160	170	46	152 000	510 000	64 000	2 950	1 970	550	**K160×170×46**
165	173	26	81 000	265 000	31 000	2 900	2 030	320	**K165×173×26**
175	183	32	99 000	350 000	42 000	2 750	1 930	400	**K175×183×32**
185	195	37	128 000	425 000	49 500	2 600	1 840	607	**K185×195×37**
195	205	37	133 000	450 000	52 000	2 450	1 760	620	**K195×205×37**
210	220	42	154 000	560 000	64 000	2 280	1 590	740	**K210×220×42**
220	230	42	158 000	590 000	67 000	2 180	1 510	790	**K220×230×42**
240	250	42	164 000	630 000	70 000	2 000	1 390	850	**K240×250×42**
265	280	50	255 000	860 000	93 000	1 800	1 160	1 810	**K265×280×50**

medias *https://www.schaeffler.de/std/1F9A*



Drawn cup needle roller bearings



Matrix for bearing preselection 895

1 Drawn cup needle roller bearings 896

1.1 Bearing design 897
1.2 Load carrying capacity 899
1.3 Compensation of angular misalignments 899
1.4 Lubrication 900
1.5 Sealing 900
1.6 Speeds 901

1.7 Noise _____ *901*
1.8 Temperature range _____ *902*
1.9 Cages _____ *902*
1.10 Internal clearance _____ *902*
1.11 Dimensions, tolerances _____ *903*
1.12 Suffixes _____ *904*
1.13 Structure of bearing designation _____ *904*
1.14 Dimensioning _____ *904*
1.15 Minimum load _____ *905*
1.16 Design of bearing arrangements _____ *905*
1.17 Mounting and dismounting _____ *908*
1.18 Legal notice regarding data freshness _ *909*
1.19 Further information _____ *909*

Product tables _____ *910*

Drawn cup needle roller bearings with open ends, drawn cup needle roller bearings with closed end, unsealed _____ *910*
Drawn cup needle roller bearings with open ends, drawn cup needle roller bearings with closed end, sealed _____ *916*
Drawn cup needle roller bearings with open ends, full complement, unsealed ____ *918*

Matrix for bearing preselection

The matrix gives an overview of the types and design features.

It can be used to make a preliminary assessment of whether a bearing is fundamentally suitable for the envisaged application.

The additional information provided in the product chapter (see column "detailed information") and in the Technical principles must, however, be observed in addition to this overview in selection of the bearing.

Design features and suitability			Drawn cup needle roller bearings			
+++ extremely suitable ++ highly suitable + suitable (+) suitable with restrictions – not suitable/not applicable ✓ available			open	sealed	full complement, open	detailed information ➤ 896
Load carrying capacity	radial		+++	+++	+++	➤ 899|1.2
	axial, one direction		–	–	–	➤ 899|1.2
	axial, both directions		–	–	–	➤ 899|1.2
	moments		–	–	–	
Compensation of angular misalignments	static		–	–	–	➤ 899|1.3
	dynamic		–	–	–	➤ 899|1.3
Bearing design	cylindrical bore		✓	✓	✓	➤ 897|1.1
	tapered bore		–	–	–	
	separable		–	–	–	➤ 908|1.17
Lubrication	greased		–	✓	–[1]	➤ 900|1.4
Sealing	open		✓	–	✓	➤ 900|1.5
	non-contact		–	–	–	➤ 900|1.5
	contact		–	✓	–	➤ 900|1.5
Operating temperature in °C	from to		–30 +140[2]	–20 +100	–30 +140	➤ 902|1.8
Suitability for	high speeds		+++	+++	+	➤ 901|1.6
	high running accuracy		++	++	++	➤ 903|1.11 ➤ 115
	low-noise running		+	+	+	➤ 901|1.7 ➤ 27
	high rigidity		++	++	++	➤ 54
	reduced friction		+	+	+	➤ 56
	length compensation within bearing		–	–	–	
	non-locating bearing arrangement		++	++	++	➤ 141
	locating bearing arrangement		–	–	–	➤ 141
X-life bearings			–	–	–	
Enveloping circle diameter F_w in mm	from to		2 60	8 50	8 50	➤ 910
Product tables	from page ➤		910	916	918	

1) Delivery with special grease for mounting only, bearings must be relubricated

2) Valid for open, ungreased bearings with sheet steel cage. With polyamide cage –20 °C to +120 °C

1 Drawn cup needle roller bearings

The bearings:

- are particularly suitable for applications with a very small radial section height on account of their very low cross-sectional height ➤*896*|*1*
- are used if the housing bore is not suitable as a raceway for needle roller and cage assemblies
- can support high radial loads (are pure radial bearings) ➤*898*|*3*, ➤*898*|*4*, ➤*898*|*5*, ➤*899*|*6*
- require a considerably smaller radial design envelope than machined needle roller bearings ➤*896*|*1*
- usually run directly on the shaft (no inner ring) ➤*896*|*1*, ➤*899*|*7*
- permit relatively high speeds
- are easy to mount ➤*908*|*1.17*
- require no additional means of axial retention (as a result of which the housing bore is easy to produce) ➤*905*|*1.16*
- can be readily used to close off the shaft ends of bearing positions (drawn cup needle roller bearings with closed end) ➤*899*|*6*
- result in particularly compact, cost-effective and economical bearing arrangements

For an overview of other product-specific features, see the Matrix for bearing preselection ➤*895*.

1
Comparison of radial design envelope

① *Drawn cup needle roller bearing with open ends and cage*
② *Needle roller bearing with cage*

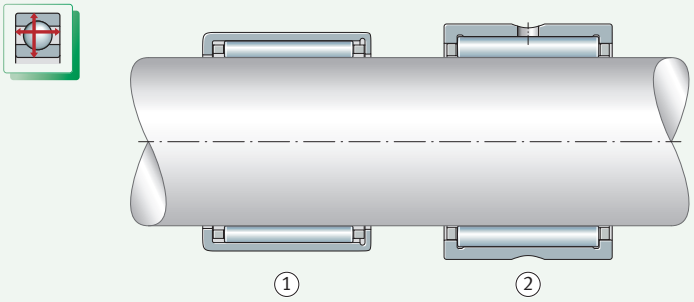

1.1 Bearing design

✎ *Design variants*

Drawn cup needle roller bearings with open ends are available as:

- standard drawn cup needle roller bearings with open ends and cage ➤*898*|🗍*3* and ➤*898*|🗍*4*
- full complement drawn cup needle roller bearings with open ends ➤*898*|🗍*5*
- special bearings ➤*899* and ➤*900*

Drawn cup needle roller bearings with closed end are available as:

- standard drawn cup needle roller bearings with closed end ➤*899*|🗍*6*
- special bearings ➤*899* and ➤*900*
- universal joint bearings ➤*899*

Drawn cup needle roller bearings

✎ *The outer cups are thin-walled and produced by forming methods*

Drawn cup needle roller bearings are part of the group of radial needle roller bearings. These ready-to-fit bearing arrangement elements are rolling bearings with a very small radial section height. They comprise thin-walled, drawn outer cups and needle roller and cage assemblies which together form a complete unit ➤*897*|🗍*2*, ➤*898*|🗍*3*, ➤*898*|🗍*5*, ➤*899*|🗍*6*. The cage guides the needle rollers parallel to the axis in pockets.

✎ *For bearing arrangements with a very small radial design envelope*

Due to the thin-walled outer cup and the absence of an inner ring, the bearings have a very low cross-sectional height ➤*896*|🗍*1*. As a result, they are particularly suitable for applications with a very small radial design envelope. The majority of the bearings are of a single row design and do not have a lubrication hole.

✎ *Drawn cup needle roller bearings can also be combined with inner rings IR or LR*

Due to the absence of an inner ring, drawn cup needle roller bearings require a hardened and ground bearing raceway on the shaft ➤*905*|*1.16*. If the shaft cannot be produced as a rolling bearing raceway, the bearings can be combined with inner rings IR or LR ➤*897*|🗍*2*. If wider inner rings are used, these can also serve as the running surface for sealing rings G and SD ➤*897*|🗍*2*.

🗍*2*
Drawn cup needle roller bearings with open ends and inner ring

① *Drawn cup needle roller bearing with open ends*
② *Standard inner ring*
③ *Wider inner ring*
④ *Sealing ring G*

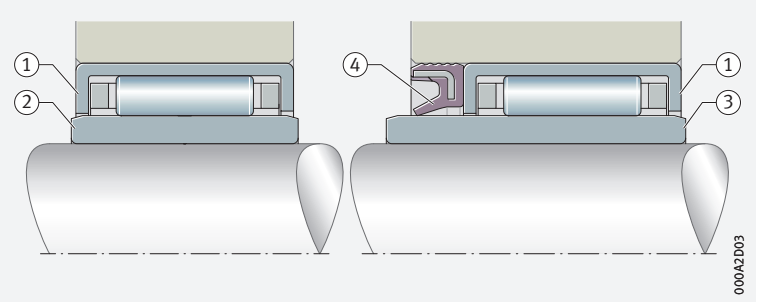

Standard drawn cup needle roller bearings with open ends and cage

✎ *In contrast to drawn cup needle roller bearings with closed end, the bearings are open*

Drawn cup needle roller bearings of this design are open at both ends and have the basic designation HK ➤*898*|🗍*3* and ➤*904*|*1.12*. They are supplied with needle roller and cage assemblies. Bearings with needle roller and cage assemblies allow higher speeds than the full complement designs. The bearings are available in open and sealed versions ➤*898*|🗍*3* and ➤*900*|*1.5*. Double row designs have a lubrication hole in the outer cup and the suffix ZW ➤*898*|🗍*4*.

3
Single row drawn cup needle roller bearings with open ends

F_r = *radial load*

① *Single row drawn cup needle roller bearing with open ends, open version*

② *Single row drawn cup needle roller bearing with open ends, sealed on both sides*

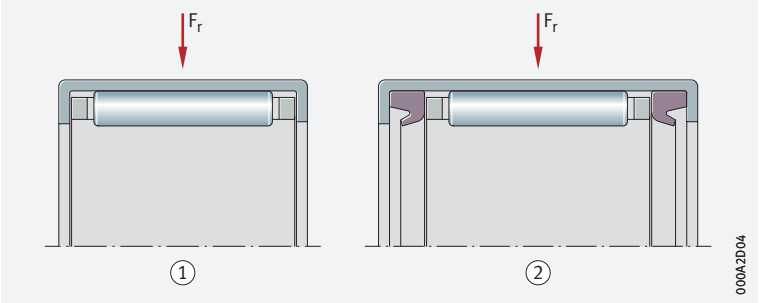

4
Double row drawn cup needle roller bearing with open ends

F_r = *radial load*

① *Lubrication hole*

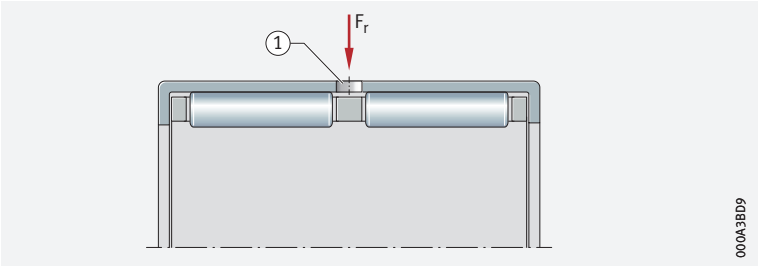

Full complement drawn cup needle roller bearings with open ends

Particularly high load carrying capacity within a very small radial design envelope

Full complement drawn cup needle roller bearings with open ends have the basic designation HN ➤*898*|*5*. As these bearings have the maximum number of needle rollers, they offer extremely high load carrying capacity. However, they do not permit the speeds that are possible when drawn cup needle roller bearings with open ends are used in conjunction with rolling elements retained by a cage.

5
Full complement drawn cup needle roller bearing with open ends

F_r = *radial load*

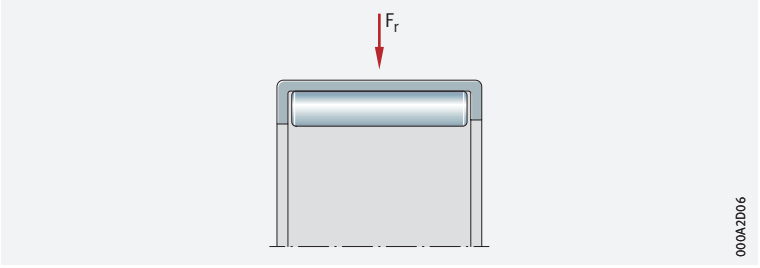

Drawn cup needle roller bearings with closed end

In contrast to drawn cup needle roller bearings with open ends, the bearings are closed at one end

Drawn cup needle roller bearings of this design are closed at one end ➤*899*|*6*. They are thus suitable for closing off the shaft ends of bearing positions. This gives protection against injury by rotating shafts and protects the bearings against contamination and moisture. Depending on the size, the base is either smooth or lock-beaded (stiffened). The profiled base can also support small axial guidance forces. Drawn cup needle roller bearings with closed end are available in open and sealed versions ➤*899*|*6* and ➤*900*|*1.5*.

6
Drawn cup needle roller bearings with closed end

F_r = *radial load*

① *Drawn cup needle roller bearing with closed end, open version*
② *Drawn cup needle roller bearing with closed end, sealed version*

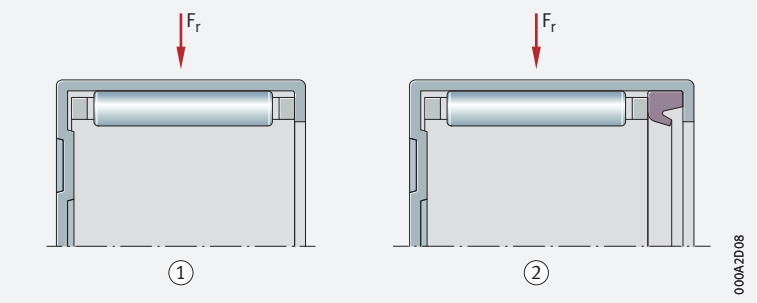

Special bearings

In addition to the standard catalogue range, special designs are available by agreement:

- with enveloping circle F_w from 2 mm to 100 mm
- for special noise requirements (bearings with special noise testing)

Universal joint bearings

For universal joints, universal joint bearings of series BU and BBU are available by agreement.

1.2 Load carrying capacity

The bearings are pure radial bearings

Drawn cup needle roller bearings can support high radial forces, but may only be subjected to radial load. If the bearing position is also required to support axial forces, the bearings can, for example, be combined with axial needle roller bearings AXW ➤*899* | *7*.

7
Drawn cup needle roller bearing with open ends combined with axial needle roller bearing

F_r = *radial load*
F_a = *axial load*

① *Drawn cup needle roller bearing with open ends HK (for supporting radial loads)*
② *Axial needle roller bearing AXW (for supporting axial loads)*

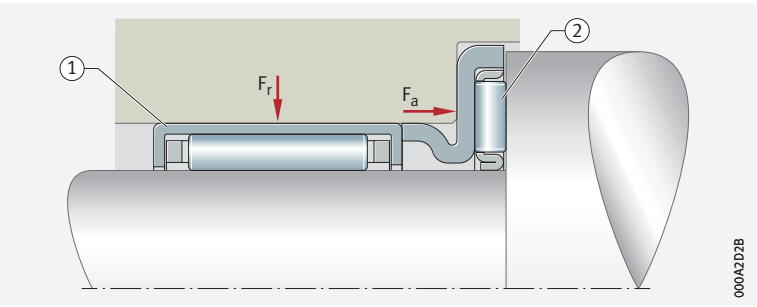

1.3 Compensation of angular misalignments

The bearings are not suitable for the compensation of shaft misalignments relative to the housing

Drawn cup needle roller bearings are not suitable for the compensation of angular misalignments. The extent to which a misalignment of the shaft can be tolerated relative to the housing bore is dependent on factors such as the design of the bearing position, the size of the bearing, the operating clearance and the load. For this reason, it is not possible to give a guide value for misalignment.

In all cases, misalignments cause increased running noise, place increased strain on the cages and have a harmful influence on the operating life of the bearings.

1.4 Lubrication

Greased bearings

Sealed bearings are greased with a lithium complex soap grease to GA08. The grease filling is measured so that it is sufficient for the entire operating life of the bearing. As a result, the bearings are maintenance-free.

Greased bearings should not be washed out or heated to temperatures of > +80 °C prior to mounting.

Ungreased bearings

Ungreased bearings must be lubricated with oil or grease. The majority of single row bearings do not have a lubrication hole.

Compatibility with plastic cages

When using bearings with plastic cages, compatibility between the lubricant and the cage material must be ensured if synthetic oils, lubricating greases with a synthetic oil base or lubricants containing a high proportion of EP additives are used.

Observe oil change intervals

Aged oil and additives in the oil can impair the operating life of plastics at high temperatures. As a result, stipulated oil change intervals must be strictly observed.

Lubrication of full complement drawn cup needle roller bearings with open ends

The needle rollers are retained by a special grease

Since the needle rollers in full complement bearings are not retained by mechanical means (no cage is present), they are retained for transport and fitting by means of a special grease (DIN 51825-K1/2K-30). However, this grease does not have an adequate long term lubrication capacity. Relubrication is therefore recommended after fitting.

If there is any uncertainty regarding relubrication, please consult Schaeffler.

Bearings of special design

The following special designs are available by agreement:

- unsealed bearings, greased using a lithium complex soap grease to GA08 (suffix GA08)
- bearings with a lubrication hole for sizes from HK0609 (suffix AS1)

1.5 Sealing

The bearings are open or sealed

Drawn cup needle roller bearings are available in an open design in accordance with DIN 618:2008 (ISO 3245:2015) and a sealed design in accordance with DIN 618:2008.

Sealed bearings

Integrated seals are particularly space-saving

Under normal operating conditions, contact seals give protection against contamination, spray water and the loss of lubricant. The integration of such seals into the bearing provides a compact, reliable, proven and economical sealing solution.

Unsealed bearings

Provide seals in the adjacent construction

In the case of unsealed bearings, sealing of the bearing position must be carried out in the adjacent construction. This must reliably prevent:

- moisture and contaminants from entering the bearing
- the egress of lubricant from the bearing

Sealing of the bearing position with sealing rings G or SD

Effective sealing elements for use in sealing open bearings

Bearing positions with open drawn cup needle roller bearings can be sealed economically using sealing rings G or SD. The sealing rings are designed as contact seals and are arranged in front of the bearing ➤*897*|⧉ *2*, ➤*901*|⧉ *8*. They are suitable for circumferential velocities at the running surface of up to 10 m/s and protect the bearing position reliably against contamination, spray water and excessive loss of lubricant. The sealing rings are matched to the low radial dimensions of drawn cup needle roller bearings with open ends. They are very easy to fit, since they are simply pressed into the housing bore.

⧉ ***8***
Sealing of the bearing position with sealing rings G or SD

① *Drawn cup needle roller bearing with open ends, open version*
② *Sealing ring G*
③ *Sealing ring SD*

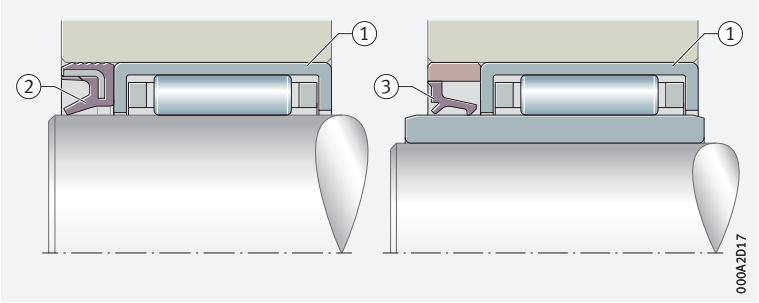

1.6 Speeds

Speeds in the product tables

The product tables generally give two speeds for the bearings:
- the kinematic limiting speed n_G
- the thermal speed rating $n_{\vartheta r}$

Limiting speeds

The limiting speed n_G is the kinematically permissible speed of the bearing. Even under favourable mounting and operating conditions, this value should not be exceeded without prior consultation with Schaeffler ➤*64*.

The values in the product tables are valid for oil lubrication.

Values for grease lubrication

For the grease lubrication of open cage bearings, 60% of the value stated in the product tables is permissible in each case.

Speeds for full complement bearings

Due to the bearing kinematics and higher temperatures within the bearing, the speeds for full complement bearings are lower than for bearings
with a cage.

Reference speeds

$n_{\vartheta r}$ is used to calculate n_ϑ

The thermal speed rating $n_{\vartheta r}$ is not an application-oriented speed limit, but is a calculated ancillary value for determining the thermally safe operating speed n_ϑ ➤*64*.

Bearings with contact seals

For bearings with contact seals, no reference speeds are defined in accordance with DIN ISO 15312:2004. As a result, only the limiting speed n_G is given in the product tables for these bearings.

1.7 Noise

Schaeffler Noise Index

The Schaeffler Noise Index (SGI) is not yet available for this bearing type ➤*69*. The data for these bearing series will be introduced and updated in stages.

Further information:
- ***medias*** *https://medias.schaeffler.com*

1.8 Temperature range

Limiting values

The operating temperature of the bearings is limited by:

- the dimensional stability of the bearing rings and rolling elements
- the cage
- the lubricant
- the seals

Possible operating temperatures of drawn cup needle roller bearings ➤*902*|▦ *1*.

▦ **1**
Permissible temperature ranges

Operating temperature	Open drawn cup needle roller bearings		Sealed drawn cup needle roller bearings
	with sheet steel cage or full complement	with polyamide cage PA66	
	–30 °C to +140 °C	–30 °C to +120 °C	–20 °C to +100 °C, limited by the lubricant and seal material

In the event of anticipated temperatures which lie outside the stated values, please contact Schaeffler.

1.9 Cages

Sheet steel cages are used as standard

With only a few exceptions, the cages are made from sheet steel. Bearings with a plastic cage have the suffix TV. Other cage designs are available by agreement. With such cages, however, suitability for high speeds and temperatures as well as the basic load ratings may differ from the values for the bearings with standard cages.

For high continuous temperatures and applications with difficult operating conditions, bearings with sheet steel cages should be used. If there is any uncertainty regarding cage suitability, please consult Schaeffler.

1.10 Internal clearance

The enveloping circle diameter F_w applies instead of the radial internal clearance

In the case of bearings without an inner ring, the dimension for the inner enveloping circle diameter F_w is used instead of the radial internal clearance. The enveloping circle is the inner inscribed circle of the needle rollers in clearance-free contact with the outer raceway. Once the bearings are mounted, the inner enveloping circle diameter F_w is approximately in tolerance class F8. The precondition for this is that the bore tolerances are observed for bearings without an inner ring ➤*905*|*1.16*, ➤*906*|▦ *6* and ➤*905*|▦ *4*.

Checking the enveloping circle diameter F_w

F_w can only be checked in a mounted condition

In the case of drawn cup needle roller bearings, the inner enveloping circle diameter F_w can only be checked once the bearings are mounted. In order to carry out the check, the bearing is pressed into a steel ring gauge, which has a cylindrical bore with the nominal dimension D and lower deviation of tolerance class N6 (in accordance with ISO 286-2). The ring gauge must have a minimum wall thickness of 20 mm, the minimum width must correspond to the width of the bearing. A plug gauge to ISO 1132-2 is used for checking purposes. The tolerance class of the enveloping circle is within the range of values defined in the table ➤*903*|▦ *2*.

Example

✎ *Example of checking of F_w*

For drawn cup needle roller bearing with open ends HK1010 (F_w = 10 mm), F_w must be between 10,013 mm and 10,031 mm (lower deviation = +13 µm, upper deviation = +31 µm), the ring gauge bore must be 13,980 mm ➤*903*|▦ *2*.

Bearings intended for enveloping circle measurements should not be repeatedly pushed in and out of the gauge. Bearings that have been checked in the ring gauge should not be used again.

▦ **2**
Ring gauge bore and enveloping circle deviations (to DIN 618:2008)

Enveloping circle F_w mm	Outside diameter D mm	Ring gauge bore mm	Enveloping circle deviation Upper µm	Lower µm
2	4,6	4,587	+24	+6
3	6,5	6,484	+24	+6
4	8	7,984	+28	+10
5	9	8,984	+28	+10
6	10	9,984	+28	+10
7	11	10,980	+31	+13
8	12	11,980	+31	+13
9	13	12,980	+31	+13
10	14	13,980	+31	+13
12	16	15,980	+34	+16
12	18	17,980	+34	+16
13	19	18,976	+34	+16
14	20	19,976	+34	+16
15	21	20,976	+34	+16
16	22	21,976	+34	+16
17	23	22,976	+34	+16
18	24	23,976	+34	+16
20	26	25,976	+41	+20
22	28	27,976	+41	+20
25	32	31,972	+41	+20
28	35	34,972	+41	+20
30	37	36,972	+41	+20
32	39	38,972	+50	+25
35	42	41,972	+50	+25
40	47	46,972	+50	+25
45	52	51,967	+50	+25
50	58	57,967	+50	+25
55	63	62,967	+60	+30
60	68	67,967	+60	+30

1.11 Dimensions, tolerances

Dimension standards

DIN ISO

The main dimensions of the bearings correspond to DIN 618:2008 and ISO 3245:2015, where standardised. Nominal dimensions of bearings ➤*910*|▦.

Tolerances

DIN ISO

The tolerances correspond to DIN 618:2008 (ISO 3245:2015), where standardised. The inner enveloping circle diameter F_w is approximately in tolerance class F8 ➤*902*|*1.10*.

1.12 Suffixes

Suffixes describe the design and features of a bearing in more detail.

3 *Suffixes and corresponding descriptions*

Suffix	Description of suffix	
AS1	With lubrication hole from HK0609	Special design, available by agreement
GA08	Unsealed, greased bearings for operating temperatures from –20 °C to +140 °C	
RS	Contact seal on one side	Standard
TV	Cage made from glass fibre reinforced polyamide PA66	
ZW	Double row design, with lubrication hole	
2RS	Contact seal on both sides	

1.13 Structure of bearing designation

With ***medias*** interchange, equivalent Schaeffler bearing designations can be determined for bearing designations from other rolling bearing manufacturers *https://www.schaeffler.de/std/1B69*.

The designation of bearings follows a set model.
The composition of designations is subject to DIN 623-1 ➤*102*|*10*.

9 *Drawn cup needle roller bearing with closed end, open version: designation structure*

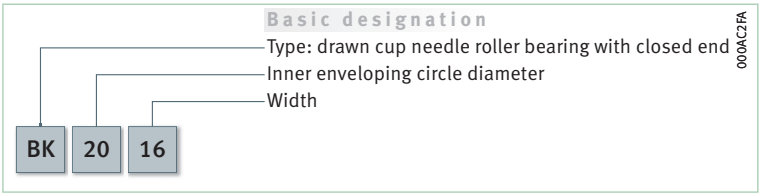

10 *Drawn cup needle roller bearing with open ends, sealed on both sides: designation structure*

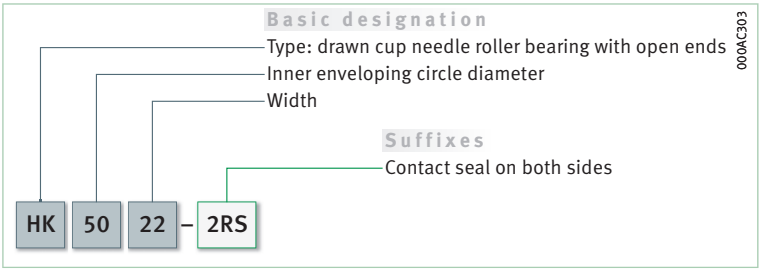

1.14 Dimensioning

Equivalent dynamic bearing load

✎ *$P = F_r$ under purely radial load of constant magnitude and direction*

The basic rating life equation $L = (C_r/P)^p$ used in the dimensioning of bearings under dynamic load assumes a load of constant magnitude and direction. In radial bearings, this is a purely radial load F_r ➤*899*|*1.2*.
The bearing load F_r is therefore used in the rating life equation for P ($P = F_r$) ➤*904*|*f 1*.

f 1 *Equivalent dynamic load*

$$P = F_r$$

Legend

P	N	Equivalent dynamic bearing load
F_r	N	Radial load.

Equivalent static bearing load

For drawn cup needle roller bearings subjected to static load ➤905| 2.

2 Equivalent static load

$$P_0 = F_{0r}$$

Legend

P_0	N	Equivalent static bearing load
F_{0r}	N	Largest radial load present (maximum load).

Static load safety factor

✎ $S_0 = C_0/P_0$

In addition to the basic rating life L (L_{10h}), it is also always necessary to check the static load safety factor S_0 ➤905| 3. For drawn cup needle roller bearings, $S_0 \geqq 3$ is necessary.

3 Static load safety factor

$$S_0 = \frac{C_0}{P_0}$$

Legend

S_0	–	Static load safety factor
C_0	N	Basic static load rating
P_0	N	Equivalent static bearing load.

1.15 Minimum load

✎ *In order to prevent damage due to slippage, a minimum radial load of $P > C_{0r}/60$ is required*

In order that no slippage occurs between the contact partners, the drawn cup needle roller bearings must be constantly subjected to a sufficiently high load. Based on experience, a minimum radial load of the order of $P > C_{0r}/60$ is thus necessary. In most cases, however, the radial load is already higher than the requisite minimum load due to the weight of the supported parts and the external forces.

If the minimum radial load is lower than indicated above, please consult Schaeffler.

1.16 Design of bearing arrangements

Radial location of bearings

✎ *Support outer cup/ inner ring over entire circumference and width*

In order to allow full utilisation of the load carrying capacity of the bearings and achieve the requisite rating life, sufficient rigid support must be provided for the thin-walled outer cups in the housing.
Due to the thin-walled outside surface, the bearings only adopt their precise geometry once they have a tight fit. The support for the outer cup in the housing bore can be produced as a cylindrical seating surface.
The seating surfaces for the outer cup and the raceway for the rolling elements or inner ring (if the bearing arrangement is not produced as a direct bearing arrangement) should not be interrupted by grooves, holes or other recesses. The accuracy of the mating parts must meet specific requirements, the bore tolerances for the housing bore (recommended tolerance classes) are dependent on the housing material ➤905| 4.
If the housings are not rigid, tests must be carried out to determine which shaft tolerance the desired operating clearance will be achieved with. Numerical values for IT grades ➤906| 5. For the bearings to be mounted without damage, the shaft must have a lead chamfer of 10° to 15°.

4 Tolerance classes and surface design for housings, as a function of the material

Housing material	Bore tolerance to ISO 286-2	Roundness tolerance max.	Parallelism tolerance max.	Recommended mean roughness value Ramax (Rzmax) µm
Steel or cast iron	N6 Ⓔ	IT5/2	IT5/2	0,8 (4)
Aluminium (Al)	R6 Ⓔ			
Magnesium (Mg)	S6 Ⓔ			

5
Numerical values for ISO standard tolerances (IT grades) to ISO 286-1:2010

IT grade	Nominal dimension in mm						
	over – incl.	**3**	**6**	**10**	**18**	**30**	**50**
		3	**6**	**10**	**18**	**30**	**50**	**80**
	Values in µm						
IT3	2	2,5	2,5	3	4	4	5
IT4	3	4	4	5	6	7	8
IT5	4	5	6	8	9	11	13

Axial location of bearings

✎ A tight fit is usually sufficient for axial location

If axial locating elements such as shoulders and snap rings are not used, the housing bore can be produced easily and particularly economically. This also gives simplified mounting of the bearings.

Raceway for bearing arrangements without an inner ring (direct bearing arrangement)

✎ Produce the raceway as a rolling bearing raceway

Where drawn cup needle roller bearings run directly on the shaft (without an inner ring), the raceway for the rolling elements must be produced as a rolling bearing raceway (hardened and ground). Design of raceways ➤ *906* | ▦ *6*. The values in the table refer to commonly encountered application examples. If the shaft cannot be produced as a raceway, the bearings can be combined with Schaeffler bearing rings. However, the section height of the bearings will then be increased by the thickness of the rings.

6
Tolerance class and surface design for the shaft (direct bearing arrangement)

Shaft tolerance to ISO 286-2	Roundness tolerance max.	Parallelism tolerance max.	Recommended mean roughness value Ramax (Rzmax) µm
h6 Ⓔ	IT3	IT3	0,2 (1)

Steels for the raceway (direct bearing arrangement)

Through hardening steels

Through hardening steels in accordance with ISO 683-17 (e.g. 100Cr6) are suitable as materials for rolling bearing raceways in direct bearing arrangements. These steels can also be surface layer hardened.

Case hardening steels

Case hardening steels must correspond to DIN EN ISO 683-17 (such as 17MnCr5, 18CrNiMo7-6) or DIN EN ISO 683-3 (such as 16MnCr5).

Steels for inductive surface layer hardening

For flame and induction hardening, steels in accordance with DIN EN ISO 683-17 (e.g. C56E2, 43CrMo4) or DIN 17212 (e.g. Cf53) should be used.

Surface hardness and hardening depth

✎ Nominal surface hardness: ≧ 670 HV

The requisite minimum surface hardness of 670 HV is valid for raceways, axial washers and shaft shoulders. Steels hardened by means of case, flame or induction hardening must have a surface hardness of 670 HV to 840 HV and an adequate hardening depth CHD or SHD.

Raceway hardness of less than 670 HV

If the raceway fulfils the requirements for rolling bearing materials but the raceway hardness is less than 670 HV (58 HRC), the static and dynamic load carrying capacity of the bearing is reduced. In order to determine the dynamic and static load carrying capacity of the bearing arrangement, the basic dynamic load rating C of the bearings must be multiplied by the reduction factor f_H (dynamic hardness factor) and the basic static load rating C_{0r} by the reduction factor f_{H0} (static hardness factor).

11
Dynamic hardness factor for raceway hardness values of less than 670 HV

f_H = *dynamic hardness factor*
HV, HRC = *surface hardness*

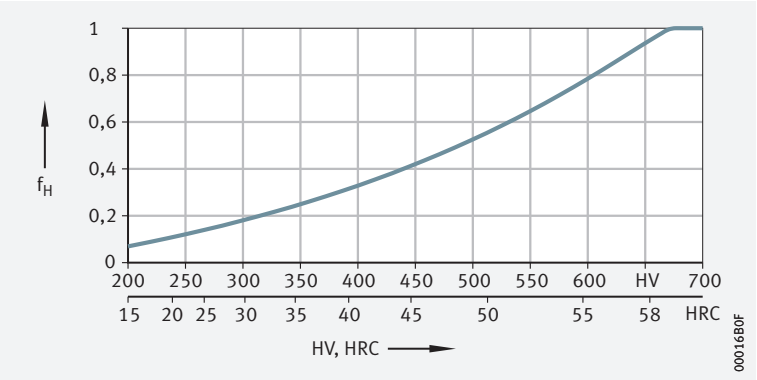

12
Static hardness factor for raceway hardness values of less than 670 HV

f_{H0} = *static hardness factor*
HV, HRC = *surface hardness*

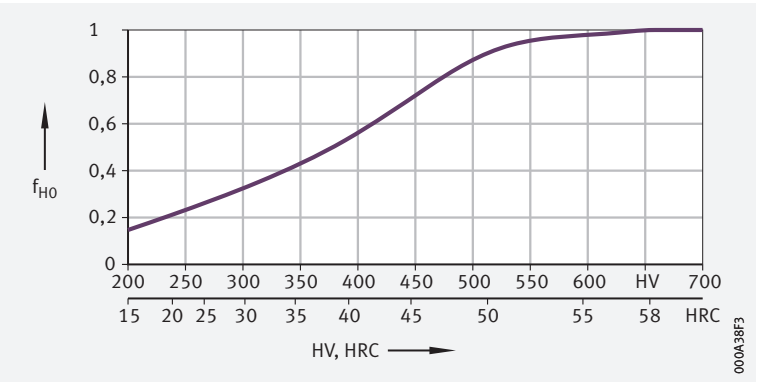

Determining the case hardening depth

Approximation value for case hardening depth

The reference value for the load present is the equivalent stress in accordance with the distortion energy hypothesis (DEH) as a function of the rolling element diameter D_w and the magnitude of the load.

For calculation of the case hardening depth CHD, the following applies:

4
Case hardening depth

$$CHD \geqq 0{,}052 \cdot D_w$$

Legend

CHD	mm	Case hardening depth
D_w	mm	Rolling element diameter.

The local hardness must always be above the local requisite hardness, which can be calculated from the equivalent stress.

Determining the surface hardening depth

In these surface hardening methods, the load and contact geometry must be taken into consideration when determining the requisite hardening depth.

For the calculation of the surface hardening depth SHD applies:

5
Surface hardening depth

$$SHD \geqq 140 \cdot D_w / R_{p0,2}$$

Legend

SHD	mm	Surface hardening depth
D_w	mm	Rolling element diameter
$R_{p0,2}$	N/mm²	Yield point of base material.

1.17 Mounting and dismounting

Ensure that the bearings are not damaged during mounting

The bearings are self-retaining (not separable). They are mounted using a special fitting mandrel ➤908| *13*. The shoulder of the fitting mandrel must rest against the marked end face (designation) of the bearing.
A toroidal ring should be used to retain the bearing. The length and oversize of the ring must be matched by the customer to the dimensions and mass of the bearing. The press-in forces occurring during mounting are dependent on several factors. Mounting must be carried out so that the bearing rib on the end face is not deformed. If the application requires a mounting procedure different from the one described, mounting trials must be carried out in order to ensure that the bearings can be mounted correctly and without causing damage.

Drawn cup needle roller bearings must not be tilted during pressing-in, as this may damage the bearing. If grease lubrication is to be used, the bearings should be lubricated with grease before mounting.

13
Mounting of a drawn cup needle roller bearing with open ends using a fitting mandrel: design of the fitting mandrel

General tolerances to ISO 2768-1

F_w = *inner enveloping circle diameter*
D = *bearing outside diameter*
R = *radii of fitting mandrel*
① *Toroidal ring*

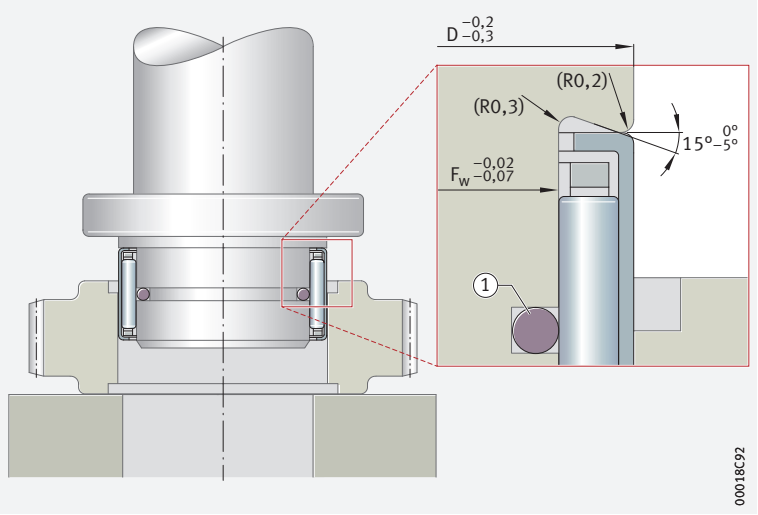

Schaeffler Mounting Handbook

Rolling bearings must be handled with great care

Rolling bearings are well-proven precision machine elements for the design of economical and reliable bearing arrangements, which offer high operational security. In order that these products can function correctly and achieve the envisaged operating life without detrimental effect, they must be handled with care.

The Schaeffler Mounting Handbook MH 1 gives comprehensive information about the correct storage, mounting, dismounting and maintenance of rotary rolling bearings *https://www.schaeffler.de/std/1D53*.
It also provides information which should be observed by the designer, in relation to the mounting, dismounting and maintenance of bearings, in the original design of the bearing position. This book is available from Schaeffler on request.

1.18 Legal notice regarding data freshness

✎ The further development of products may also result in technical changes to catalogue products

Of central interest to Schaeffler is the further development and optimisation of its products and the satisfaction of its customers. In order that you, as the customer, can keep yourself optimally informed about the progress that is being made here and with regard to the current technical status of the products, we publish any product changes which differ from the printed version in our electronic product catalogue.

§ We therefore reserve the right to make changes to the data and illustrations in this catalogue. This catalogue reflects the status at the time of printing. More recent publications released by us (as printed or digital media) will automatically precede this catalogue if they involve the same subject. Therefore, please always use our electronic product catalogue to check whether more up-to-date information or modification notices exist for your desired product.

Link to electronic product catalogue

The following link will take you to the Schaeffler electronic product catalogue: *https://medias.schaeffler.com*.

1.19 Further information

In addition to the data in this chapter, the following chapters in Technical principles must also be observed in the design of bearing arrangements:

- Determining the bearing size ➤*34*
- Rigidity ➤*54*
- Friction and increases in temperature ➤*56*
- Speeds ➤*64*
- Bearing data ➤*97*
- Lubrication ➤*70*
- Sealing ➤*185*
- Design of bearing arrangements ➤*141*
- Mounting and dismounting ➤*194*

Drawn cup needle roller bearings with open ends

Drawn cup needle roller bearings with closed end

Unsealed

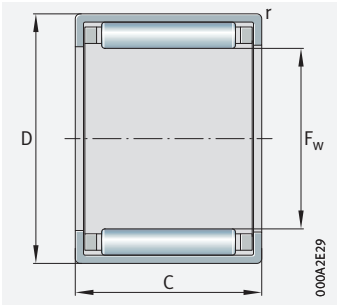

HK

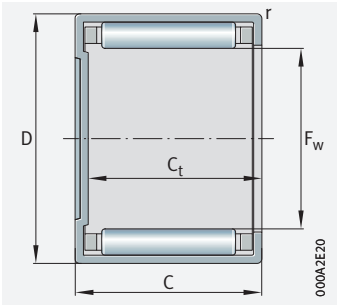

BK

F_w = 2 – 16 mm

Main dimensions			Basic load ratings		Fatigue limit load	Limiting speed	Speed rating	Drawn cup needle roller bearings with open ends		Drawn cup needle roller bearings with closed end	
F_w	D	C	dyn. C_r	stat. C_{0r}	C_{ur}	n_G	$n_{\vartheta r}$	Mass m	Designation ➤*904|1.12* ➤*904|1.13*	Mass m	Designation ➤*904|1.12* ➤*904|1.13*
		–0,3	N	N	N	min^{-1}	min^{-1}	≈ g		≈ g	
2	4,6	5	465	265	45,5	58 000	93 000	0,3	**HK0205-TV**[1]	–	–
3	6,5	6	1 230	840	145	48 000	57 000	1	**HK0306-TV**[1]	1	**BK0306-TV**[1]
4	8	8	1 780	1 310	147	42 500	44 500	1,5	**HK0408**[1]	1,6	**BK0408**[1]
5	9	9	2 400	1 990	243	39 000	36 500	2	**HK0509**[1]	2,1	**BK0509**[1]
6	10	6	1 610	1 220	212	36 500	31 500	1,5	**HK0606**[1]	–	–
	10	8	2 030	1 650	187	36 500	31 500	2,1	**HK0608**[1]	–	–
	10	9	2 850	2 600	320	36 500	30 500	2,5	**HK0609**	2,6	**BK0609**
7	11	9	3 100	2 950	360	33 000	26 500	2,6	**HK0709**	2,9	**BK0709**
8	12	8	2 750	2 600	300	29 500	23 800	2,7	**HK0808**	3	**BK0808**
	12	10	3 800	3 950	510	29 500	23 200	3	**HK0810**	3,4	**BK0810**
9	13	8	3 550	3 750	450	26 500	20 600	3	**HK0908**	–	–
	13	10	4 250	4 650	610	26 500	20 600	4	**HK0910**	4,3	**BK0910**
	13	12	5 300	6 300	870	26 500	20 200	4,6	**HK0912**	4,9	**BK0912**
10	14	10	4 400	5 100	670	24 300	18 700	4,1	**HK1010**	4,3	**BK1010**
	14	12	5 500	6 800	950	24 300	18 400	4,8	**HK1012**	5	**BK1012**
	14	15	6 800	8 800	1 230	24 300	18 200	6	**HK1015**	6,2	**BK1015**
12	16	10	4 950	6 200	820	20 700	15 700	4,6	**HK1210**	5,2	**BK1210**
	18	12	6 500	7 300	880	20 000	15 500	9	**HK1212**	10	**BK1212**
	18	16	9 300	11 500	1 450	20 000	15 100	13	**HK1216**	–	–
13	19	12	6 800	7 900	960	18 700	14 400	10	**HK1312**	11	**BK1312**
14	20	12	7 100	8 500	1 030	17 500	13 500	10,5	**HK1412**	12	**BK1412**
15	21	12	7 900	9 400	1 170	16 300	12 300	11	**HK1512**	13	**BK1512**
	21	16	10 500	14 400	1 810	16 500	12 300	15	**HK1516**	17	**BK1516**
	21	22	13 400	19 500	2 420	16 500	12 300	20	**HK1522-ZW**	–	–
16	22	12	7 600	9 700	1 180	15 600	11 900	12	**HK1612**	14	**BK1612**
	22	16	10 900	15 300	1 940	15 600	11 600	16	**HK1616**	18	**BK1616**
	22	22	13 100	19 400	2 360	15 600	11 700	22	**HK1622-ZW**	24	**BK1622-ZW**

medias *https://www.schaeffler.de/std/1F9A*

1) Not available with lubrication hole.

2) For unsealed drawn cup needle roller bearings, dimensionally matched sealing rings of series G or SD can be used to provide protection against contamination.

Dimensions			Suitable inner rings		Suitable sealing rings[2]	
F_w	C_t min.	r min.	LR designation	IR designation		
2	–	0,3	–	–	–	–
3	5,2	0,3	–	–	–	–
4	6,4	0,3	–	–	**GR4×8×2**	–
5	7,4	0,4	–	–	**GR5×9×2**	–
6	–	0,4	–	–	**GR6×10×2**	–
	–	0,4	–	–	**GR6×10×2**	–
	7,4	0,4	–	–	**GR6×10×2**	–
7	7,4	0,4	–	–	**GR7×11×2**	–
8	6,4	0,4	–	–	–	**G8×12×3**
	8,4	0,4	–	**IR5×8×12-XL**	–	**G8×12×3**
9	–	0,4	–	–	**GR9×13×3**	**G9×13×3**
	8,4	0,4	–	–	**GR9×13×3**	**G9×13×3**
	10,4	0,4	–	**IR6×9×12-XL**	**GR9×13×3**	**G9×13×3**
10	8,4	0,4	**LR7×10×10,5**	**IR7×10×10,5-XL**	**GR10×14×3**	**G10×14×3**
	10,4	0,4	–	**IR7×10×12-XL**	**GR10×14×3**	**G10×14×3**
	13,4	0,4	–	**IR7×10×16-XL**	**GR10×14×3**	**G10×14×3**
12	8,4	0,4	**LR8×12×10,5**	**IR8×12×10,5-XL**	**SD12×18×3**	**G12×18×3**
	9,3	0,8	**LR8×12×12,5**	**IR8×12×12,5-XL**	**SD12×18×3**	**G12×18×3**
	–	0,8	–	**IR9×12×16-XL**	**SD12×18×3**	**G12×18×3**
13	9,3	0,8	**LR10×13×12,5**	**IR10×13×12,5-XL**	–	**G13×19×3**
14	9,3	0,8	–	**IR10×14×13-XL**	**SD14×20×3**	**G14×20×3**
15	9,3	0,8	**LR12×15×12,5**	**IR12×15×12-XL**	**SD15×21×3**	**G15×21×3**
	13,3	0,8	**LR12×15×16,5**	**IR12×15×16-XL**	**SD15×21×3**	**G15×21×3**
	–	0,8	**LR12×15×22,5**	**IR12×15×22,5-XL**	**SD15×21×3**	**G15×21×3**
16	9,3	0,8	–	**IR12×16×13-XL**	**SD16×22×3**	**G16×22×3**
	13,3	0,8	–	**IR12×16×16-XL**	**SD16×22×3**	**G16×22×3**
	19,3	0,8	–	**IR12×16×22-XL**	**SD16×22×3**	**G16×22×3**

Drawn cup needle roller bearings with open ends

Drawn cup needle roller bearings with closed end

Unsealed

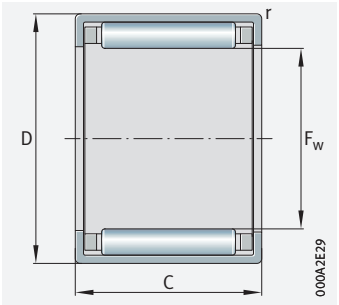

HK

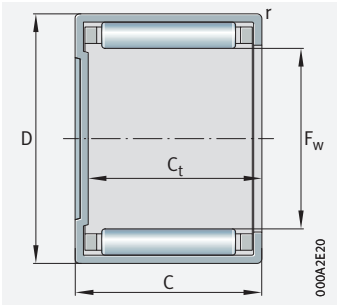

BK with F_w < 25 mm

F_w = 17 – 30 mm

Main dimensions			Basic load ratings		Fatigue limit load	Limiting speed	Speed rating	Drawn cup needle roller bearings with open ends		Drawn cup needle roller bearings with closed end	
F_w	D	C	dyn. C_r	stat. C_{0r}	C_{ur}	n_G	$n_{\vartheta r}$	Mass m	Designation ➤*904|1.12* ➤*904|1.13*	Mass m	Designation ➤*904|1.12* ➤*904|1.13*
		–0,3	N	N	N	min^{-1}	min^{-1}	≈ g		≈ g	
17	23	12	7 900	10 300	1 260	14 700	11 200	12	**HK1712**	–	–
18	24	12	8 100	10 900	1 330	14 000	10 700	13	**HK1812**	15	**BK1812**
	24	16	11 600	17 300	2 180	14 000	10 400	18	**HK1816**	20	**BK1816**
20	26	10	6 400	8 200	1 060	12 700	10 000	12	**HK2010**	–	–
	26	12	8 600	12 100	1 480	12 700	9 700	14	**HK2012**	–	–
	26	16	12 700	20 100	2 550	12 700	9 300	19	**HK2016**	22	**BK2016**
	26	20	15 700	26 000	3 600	12 700	9 300	24	**HK2020**	27	**BK2020**
	26	30	21 800	40 000	5 100	12 700	9 200	35	**HK2030-ZW**	–	–
22	28	10	7 500	10 500	1 390	11 700	9 000	13	**HK2210**	–	–
	28	12	9 100	13 400	1 630	11 700	8 900	15	**HK2212**	18	**BK2212**
	28	16	13 400	22 100	2 850	11 700	8 500	21	**HK2216**	24	**BK2216**
	28	20	16 500	29 000	3 950	11 700	8 500	26	**HK2220**	–	–
25	32	12	11 000	15 200	2 030	10 200	7 800	20	**HK2512**	–	–
	32	16	15 600	24 000	3 200	10 200	7 500	27	**HK2516**	32	**BK2516**
	32	20	19 900	33 000	4 300	10 200	7 400	33	**HK2520**	38	**BK2520**
	32	26	25 500	45 000	6 300	10 200	7 300	44	**HK2526**	48	**BK2526**
	32	38	34 000	66 000	8 600	10 200	7 300	64	**HK2538-ZW**	68	**BK2538-ZW**
28	35	16	16 400	26 500	3 500	9 200	6 800	29	**HK2816**	–	–
	35	20	20 900	36 000	4 700	9 200	6 700	36	**HK2820**	–	–
30	37	12	12 100	18 200	2 440	8 600	6 600	23	**HK3012**	28	**BK3012**
	37	16	17 200	29 000	3 850	8 600	6 400	31	**HK3016**	38	**BK3016**
	37	20	22 000	39 500	5 100	8 600	6 300	39	**HK3020**	47	**BK3020**
	37	22	24 800	46 000	6 200	8 600	6 200	42	**HK3022**	–	–
	37	26	28 000	54 000	7 600	8 600	6 200	51	**HK3026**	58	**BK3026**
	37	38	37 500	79 000	10 300	8 600	6 200	76	**HK3038-ZW**	84	**BK3038-ZW**

medias *https://www.schaeffler.de/std/1F9A*

[1] For unsealed drawn cup needle roller bearings, dimensionally matched sealing rings of series G or SD can be used to provide protection against contamination.

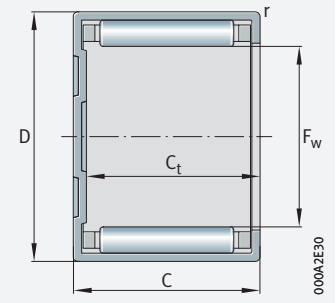

BK with F_w ≧ 25 mm

Dimensions			Suitable inner rings		Suitable sealing rings[1)]	
F_w	C_t min.	r min.	LR designation	IR designation		
17	–	0,8	**–**	**–**	**SD17×23×3**	**G17×23×3**
18	9,3	0,8	**LR15×18×12,5**	**–**	**SD18×24×3**	**G18×24×3**
	13,3	0,8	**LR15×18×16,5**	**IR15×18×16-XL**	**SD18×24×3**	**G18×24×3**
20	–	0,8	**–**	**–**	**SD20×26×4**	**G20×26×4**
	–	0,8	**–**	**IR15×20×13-XL**	**SD20×26×4**	**G20×26×4**
	13,3	0,8	**LR17×20×16,5**	**IR17×20×16-XL**	**SD20×26×4**	**G20×26×4**
	17,3	0,8	**LR17×20×20,5**	**IR17×20×20-XL**	**SD20×26×4**	**G20×26×4**
	–	0,8	**LR17×20×30,5**	**IR17×20×30,5-XL**	**SD20×26×4**	**G20×26×4**
22	–	0,8	**–**	**–**	**SD22×28×4**	**G22×28×4**
	9,3	0,8	**–**	**IR17×22×13-XL**	**SD22×28×4**	**G22×28×4**
	13,3	0,8	**–**	**IR17×22×16-XL**	**SD22×28×4**	**G22×28×4**
	–	0,8	**–**	**IR17×22×23-XL**	**SD22×28×4**	**G22×28×4**
25	–	0,8	**LR20×25×12,5**	**–**	**SD25×32×4**	**G25×32×4**
	13,3	0,8	**LR20×25×16,5**	**IR20×25×17-XL**	**SD25×32×4**	**G25×32×4**
	17,3	0,8	**LR20×25×20,5**	**IR20×25×20-XL**	**SD25×32×4**	**G25×32×4**
	23,3	0,8	**LR20×25×26,5**	**IR20×25×26,5-XL**	**SD25×32×4**	**G25×32×4**
	35,3	0,8	**LR20×25×38,5**	**IR20×25×38,5-XL**	**SD25×32×4**	**G25×32×4**
28	–	0,8	**–**	**IR22×28×17-XL**	**SD28×35×4**	**G28×35×4**
	–	0,8	**LR22×28×20,5**	**IR22×28×20-XL**	**SD28×35×4**	**G28×35×4**
30	9,3	0,8	**LR25×30×12,5**	**–**	**SD30×37×4**	**G30×37×4**
	13,3	0,8	**LR25×30×16,5**	**IR25×30×17-XL**	**SD30×37×4**	**G30×37×4**
	17,3	0,8	**LR25×30×20,5**	**IR25×30×20-XL**	**SD30×37×4**	**G30×37×4**
	–	0,8	**–**	**–**	**SD30×37×4**	**G30×37×4**
	23,3	0,8	**LR25×30×26,5**	**IR25×30×26,5-XL**	**SD30×37×4**	**G30×37×4**
	35,3	0,8	**LR25×30×38,5**	**IR25×30×38,5-XL**	**SD30×37×4**	**G30×37×4**

Drawn cup needle roller bearings with open ends

Drawn cup needle roller bearings with closed end

Unsealed

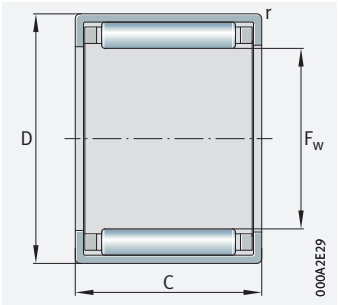

HK

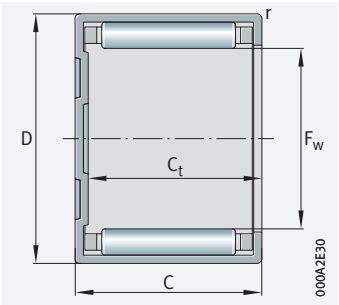

BK

F_w = 32 – 60 mm

Main dimensions			Basic load ratings		Fatigue limit load	Limiting speed	Speed rating	Drawn cup needle roller bearings with open ends		Drawn cup needle roller bearings with closed end	
F_w	D	C	dyn. C_r	stat. C_{0r}	C_{ur}	n_G	$n_{\vartheta r}$	Mass m	Designation ➤*904|1.12* ➤*904|1.13*	Mass m	Designation ➤*904|1.12* ➤*904|1.13*
		–0,3	N	N	N	min^{-1}	min^{-1}	≈ g		≈ g	
32	39	20	23 000	42 500	5 600	8 100	5 900	40,6	**HK3220**	–	–
	39	24	27 500	54 000	7 500	8 100	5 900	49	**HK3224**	–	–
35	42	12	13 100	21 300	2 850	7 500	5 800	27	**HK3512**	–	–
	42	16	18 700	33 500	4 450	7 500	5 600	36	**HK3516**	–	–
	42	20	23 800	46 000	6 000	7 500	5 500	44	**HK3520**	53	**BK3520**
40	47	12	14 000	24 300	3 250	6 600	5 200	30	**HK4012**	–	–
	47	16	20 000	38 500	5 100	6 600	5 000	39	**HK4016**	–	–
	47	20	25 500	52 000	6 900	6 600	4 900	54	**HK4020**	62	**BK4020**
45	52	12	14 900	27 500	3 650	5 900	4 650	33	**HK4512**	–	–
	52	16	21 300	43 000	5 800	5 900	4 550	46	**HK4516**	–	–
	52	20	27 000	59 000	7 700	5 900	4 450	56	**HK4520**	72	**BK4520**
50	58	20	31 000	63 000	8 400	5 300	4 050	70	**HK5020**	–	–
	58	25	38 500	84 000	11 900	5 300	4 000	90	**HK5025**	109	**BK5025**
55	63	20	31 500	67 000	8 900	4 850	3 800	74	**HK5520**	–	–
	63	28	44 000	103 000	14 900	4 850	3 700	105	**HK5528**	–	–
60	68	12	17 400	32 000	4 350	4 450	3 750	49	**HK6012**	–	–
	68	20	33 500	75 000	9 900	4 450	3 500	81	**HK6020**	–	–
	68	32	53 000	135 000	20 000	4 450	3 400	136	**HK6032**	–	–

medias *https://www.schaeffler.de/std/1F9A*

[1] For unsealed drawn cup needle roller bearings, dimensionally matched sealing rings of series G or SD can be used to provide protection against contamination.

Dimensions			Suitable inner rings		Suitable sealing rings[1)]	
F_w	C_t min.	r min.	LR designation	IR designation		
32	–	0,8	–	**IR28×32×20-XL**	–	–
	–	0,8	–	–	–	–
35	–	0,8	**LR30×35×12,5**	**IR30×35×13-XL**	**SD35×42×4**	**G35×42×4**
	–	0,8	**LR30×35×16,5**	**IR30×35×16-XL**	**SD35×42×4**	**G35×42×4**
	17,3	0,8	**LR30×35×20,5**	**IR30×35×20-XL**	**SD35×42×4**	**G35×42×4**
40	–	0,8	**LR35×40×12,5**	–	**SD40×47×4**	**G40×47×4**
	–	0,8	**LR35×40×16,5**	**IR35×40×17-XL**	**SD40×47×4**	**G40×47×4**
	17,3	0,8	**LR35×40×20,5**	**IR35×40×20-XL**	**SD40×47×4**	**G40×47×4**
45	–	0,8	–	–	**SD45×52×4**	**G45×52×4**
	–	0,8	**LR40×45×16,5**	**IR40×45×17-XL**	**SD45×52×4**	**G45×52×4**
	17,3	0,8	**LR40×45×20,5**	**IR40×45×20-XL**	**SD45×52×4**	**G45×52×4**
50	–	0,8	**LR45×50×20,5**	–	**SD50×58×4**	**G50×58×4**
	22,3	0,8	–	**IR45×50×25-XL**	**SD50×58×4**	**G50×58×4**
55	–	0,8	**LR50×55×20,5**	–	**SD55×63×5**	**G55×63×5**
	–	0,8	–	–	**SD55×63×5**	**G55×63×5**
60	–	0,8	–	–	–	–
	–	0,8	–	–	–	–
	–	0,8	–	–	–	–

Drawn cup needle roller bearings with open ends

Drawn cup needle roller bearings with closed end

Sealed

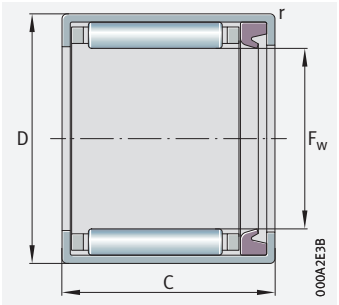

HK..-RS

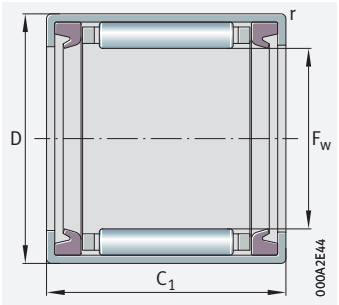

HK..-2RS

F_w = 8 – 50 mm

Main dimensions				Basic load ratings		Fatigue limit load	Limiting speed	Drawn cup needle roller bearings with open ends			
								Sealed on one side		Sealed on both sides	
F_w	D	C 0 –0,3	C_1 0 –0,3	dyn. C_r N	stat. C_{0r} N	C_{ur} N	n_G grease min^{-1}	Mass m ≈ g	Designation ➤*904|1.12* ➤*904|1.13*	Mass m ≈ g	Designation ➤*904|1.12* ➤*904|1.13*
8	12	–	10	2 180	1 930	270	17 700	–	–	3,2	**HK0810-2RS**
	12	10	12	2 750	2 600	300	17 700	3	**HK0810-RS**	3,3	**HK0812-2RS**
	12	12	–	3 800	3 950	510	17 700	3,1	**HK0812-RS**	–	–
10	14	–	10	2 410	2 330	405	14 600	–	–	4	**HK1010-2RS**
	14	12	12	3 200	3 350	385	14 600	–	–	4,3	**HK1012-2RS**
	14	12	14	4 400	5 100	670	14 600	4,2	**HK1012-RS**	4,6	**HK1014-2RS**
12	16	–	14	4 950	6 200	820	12 400	–	–	11	**HK1214-2RS**
	18	14	16	6 500	7 300	880	12 000	10	**HK1214-RS**	11	**HK1216-2RS**
14	20	14	16	7 100	8 500	1 030	10 500	12	**HK1414-RS**	13	**HK1416-2RS**
15	21	14	16	7 800	9 800	1 210	9 900	12	**HK1514-RS**	15	**HK1516-2RS**
	21	18	20	10 500	14 400	1 810	9 900	16	**HK1518-RS**	18	**HK1520-2RS**
16	22	14	16	7 600	9 700	1 180	9 300	13	**HK1614-RS**	14	**HK1616-2RS**
	22	–	20	10 900	15 300	1 940	9 300	–	–	18	**HK1620-2RS**
18	24	14	16	8 100	10 900	1 330	8 400	14	**HK1814-RS**	15	**HK1816-2RS**
20	26	–	16	8 600	12 100	1 480	7 600	–	–	18	**HK2016-2RS**
	26	18	20	12 700	20 100	2 550	7 600	21	**HK2018-RS**	23	**HK2020-2RS**
22	28	14	16	9 100	13 400	1 630	7 000	16	**HK2214-RS**	18	**HK2216-2RS**
	28	18	20	13 400	22 100	2 850	7 000	24	**HK2218-RS**	26	**HK2220-2RS**
25	32	–	16	11 000	15 200	2 030	6 100		–	27	**HK2516-2RS**
	32	18	20	15 600	24 000	3 200	6 100	29	**HK2518-RS**	31	**HK2520-2RS**
	32	–	24	19 900	33 000	4 300	6 100	–	–	40	**HK2524-2RS**
	32	–	30	25 500	45 000	6 300	6 100	–	–	47	**HK2530-2RS**
28	35	18	20	16 400	26 500	3 500	5 500	31	**HK2818-RS**	34	**HK2820-2RS**
30	37	–	16	12 100	18 200	2 440	5 200	–	–	31	**HK3016-2RS**
	37	18	20	17 200	29 000	3 850	5 200	37	**HK3018-RS**	36	**HK3020-2RS**
	37	–	24	22 000	39 500	5 100	5 200	–	–	44	**HK3024-2RS**
35	42	–	16	13 100	21 300	2 850	4 500	–	–	32	**HK3516-2RS**
	42	18	20	18 700	33 500	4 450	4 500	39	**HK3518-RS**	41	**HK3520-2RS**
40	47	–	16	14 000	24 300	3 250	3 950	–	–	37	**HK4016-2RS**
	47	18	20	20 000	38 500	5 100	3 950	45	**HK4018-RS**	48	**HK4020-2RS**
45	52	18	20	21 300	43 000	5 800	3 550	50	**HK4518-RS**	54	**HK4520-2RS**
50	58	22	24	31 000	63 000	8 400	3 150	76	**HK5022-RS**	81	**HK5024-2RS**

medias *https://www.schaeffler.de/std/1F9A*

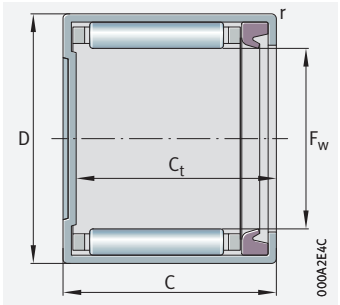

BK..-RS with F_w < 25 mm

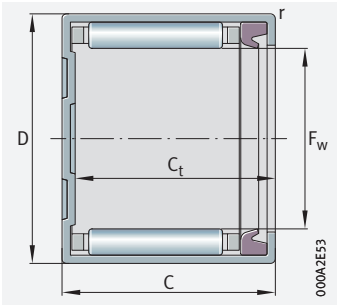

BK..-RS with F_w ≧ 25 mm

	Drawn cup needle roller bearings with closed end Sealed		Dimensions		Suitable inner rings		
					for HK..-RS and HK..-2RS		for BK..-RS
F_w	Mass m ≈ g	Designation ➤*904|1.12* ➤*904|1.13*	C_t min.	r min.	LR Designation	IR Designation	Designation
8	–	–	–	0,4	–	–	–
	–	–	–	0,4	–	**IR5×8×12-XL**	–
	–	–	–	0,4	–	**IR5×8×12-XL**	–
10	–	–	–	0,4	**LR7×10×10,5**	**IR7×10×10,5-XL**	–
	4,3	**BK1012-RS**	10,4	0,4	–	**IR7×10×12-XL**	–
	–	–	–	0,4	–	–	–
12	–	–	–	0,8	–	–	–
	–	–	–	0,8	–	**IR9×12×16-XL**	–
14	13	**BK1414-RS**	11,3	0,8	–	–	–
15	14	**BK1514-RS**	11,3	0,8	**LR12×15×16,5**	**IR12×15×16-XL**	–
	–	–	–	0,8	–	–	–
16	15	**BK1614-RS**	11,3	0,8	–	**IR12×16×16-XL**	**IR12×16×13-XL**
	–	–	–	0,8	–	**IR12×16×20-XL**	–
18	–	–	–	0,8	**LR15×18×16,5**	**IR15×18×16-XL**	–
20	–	–	–	0,8	**LR17×20×16,5**	**IR17×20×16-XL**	–
	24	**BK2018-RS**	15,3	0,8	**LR17×20×20,5**	**IR17×20×20-XL**	–
22	–	–	–	0,8	–	**IR17×22×16-XL**	–
	–	–	–	0,8	–	**IR17×22×23-XL**	–
25	–	–	–	0,8	**LR20×25×16,5**	**IR20×25×17-XL**	–
	34	**BK2518-RS**	15,3	0,8	**LR20×25×20,5**	**IR20×25×20-XL**	**LR20×25×20,5**
	–	–	–	0,8	–	–	–
	–	–	–	0,8	–	**IR20×25×30-XL**	–
28	–	–	–	0,8	**LR22×28×20,5**	**IR22×28×20-XL**	–
30	–	–	–	0,8	**LR25×30×16,5**	**IR25×30×17-XL**	–
	–	–	–	0,8	**LR25×30×20,5**	**IR25×30×20-XL**	–
	–	–	–	0,8	–	–	–
35	–	–	–	0,8	**LR30×35×16,5**	**IR30×35×16-XL**	–
	–	–	–	0,8	**LR30×35×20,5**	**IR30×35×20-XL**	–
40	–	–	–	0,8	**LR35×40×16,5**	**IR35×40×17-XL**	–
	–	–	–	0,8	**LR35×40×20,5**	**IR35×40×20-XL**	–
45	–	–	–	0,8	**LR40×45×20,5**	**IR40×45×20-XL**	–
50	–	–	–	0,8	–	**IR45×50×25-XL**	–

Drawn cup needle roller bearings with open ends

Full complement
Unsealed

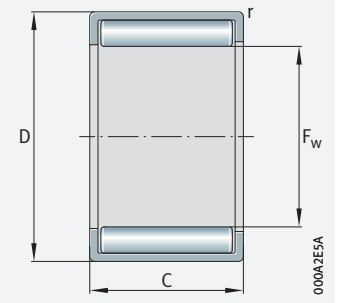

HN

F_w = 8 – 50 mm

Main dimensions			Basic load ratings		Fatigue limit load	Limiting speed	Speed rating	Mass	Designation ➤*904*|*1.12* ➤*904*|*1.13*
F_w	D	C	dyn. C_r	stat. C_{0r}	C_{ur}	n_G grease	$n_{\vartheta r}$	m	
			N	N	N	min^{-1}	min^{-1}	≈ g	
8	12	8	5 000	6 700	880	12 700	18 000	3	**HN0808**
12	16	10	8 000	13 400	1 880	8 900	11 900	5,3	**HN1210**
	18	12	10 200	15 200	1 990	8 600	12 000	10,5	**HN1212**
14	20	12	11 000	17 500	2 300	7 500	10 400	12	**HN1412**
15	21	16	15 400	27 500	3 700	7 100	9 600	14	**HN1516**
16	22	12	12 000	20 300	2 650	6 700	9 200	13	**HN1612**
18	24	16	17 000	32 500	4 350	6 000	8 000	20	**HN1816**
20	26	20	22 400	48 000	6 700	5 400	7 200	29,5	**HN2020**
25	32	20	28 000	59 000	8 000	4 350	5 800	39,6	**HN2520**
28	35	20	30 000	67 000	9 100	3 950	5 200	44	**HN2820**
35	42	20	33 500	83 000	11 300	3 200	4 250	54	**HN3520**
40	47	20	36 000	95 000	12 900	2 800	3 750	60,5	**HN4020**
45	52	20	38 500	108 000	14 700	2 500	3 400	66	**HN4520**
	52	25	47 000	139 000	19 900	2 500	3 350	85	**HN4525**
50	58	20	44 500	119 000	16 500	2 260	3 100	85,3	**HN5020**
	58	25	54 000	152 000	22 000	2 260	3 050	107	**HN5025**

medias *https://www.schaeffler.de/std/1F9A*

Dimensions		Suitable inner rings	
F_w	r min.	LR designation	IR designation
8	0,4	–	–
12	0,4	**LR8×12×10,5**	**IR8×12×10,5-XL**
	0,8	**LR8×12×12,5**	**IR8×12×12,5-XL**
14	0,8	–	**IR10×14×13-XL**
15	0,8	**LR12×15×16,5**	**IR12×15×16-XL**
16	0,8	–	**IR12×16×13-XL**
18	0,8	**LR15×18×16,5**	**IR15×18×16-XL**
20	0,8	**LR17×20×20,5**	**IR17×20×20-XL**
25	0,8	**LR20×25×20,5**	**IR20×25×20-XL**
28	0,8	**LR22×28×20,5**	**IR20×28×20-XL**
35	0,8	**LR30×35×20,5**	**IR30×35×20-XL**
40	0,8	**LR35×40×20,5**	**IR32×40×20-XL**
45	0,8	**LR40×45×20,5**	**IR40×45×20-XL**
	0,8	–	–
50	0,8	**LR45×50×20,5**	–
	0,8	**LR45×50×25,5**	**IR45×50×25-XL**

Needle roller bearings



Matrix for bearing preselection ____ 922

1 Needle roller bearings, aligning needle roller bearings ____ 924

1.1 Bearing design ____ 924
1.2 Load carrying capacity ____ 931
1.3 Compensation of angular misalignments ____ 931
1.4 Lubrication ____ 932
1.5 Sealing ____ 932
1.6 Speeds ____ 933
1.7 Noise ____ 933
1.8 Temperature range ____ 934
1.9 Cages ____ 934
1.10 Internal clearance ____ 934
1.11 Dimensions, tolerances ____ 936
1.12 Suffixes ____ 936
1.13 Structure of bearing designation ____ 937
1.14 Dimensioning ____ 938

1.15 Minimum load 938
1.16 Design of bearing arrangements 938
1.17 Mounting and dismounting 944
1.18 Legal notice regarding data freshness 944
1.19 Further information 945

Product tables 946
Needle roller bearings with ribs 946
Needle roller bearings without ribs 966
Aligning needle roller bearings 972

2 Combined needle roller bearings 974

2.1 Bearing design 974
2.2 Load carrying capacity 978
2.3 Compensation of angular misalignments 981
2.4 Lubrication 981
2.5 Sealing 982
2.6 Speeds 982
2.7 Noise 983
2.8 Temperature range 983
2.9 Cages 983
2.10 Internal clearance 983
2.11 Dimensions, tolerances 984
2.12 Suffixes 985
2.13 Structure of bearing designation 985
2.14 Dimensioning 986
2.15 Minimum load 987
2.16 Design of bearing arrangements 988
2.17 Mounting and dismounting 992
2.18 Legal notice regarding data freshness 993
2.19 Further information 993

Product tables 994
Needle roller/axial deep groove ball bearings 994
Needle roller/axial cylindrical roller bearings 998
Needle roller/angular contact ball bearings 1000

3 Inner rings 1002

3.1 Product design 1002
3.2 Temperature range 1004
3.3 Internal clearance 1004
3.4 Tolerances 1005
3.5 Suffixes 1005
3.6 Structure of bearing designation 1006
3.7 Design of bearing arrangements 1006
3.8 Mounting and dismounting 1007
3.9 Legal notice regarding data freshness 1007

Product tables 1008
Inner rings without lubrication hole 1008
Inner rings with lubrication hole 1014

Matrix for bearing preselection

The matrix gives an overview of the types and design features.

It can be used to make a preliminary assessment of whether a bearing is fundamentally suitable for the envisaged application.

The additional information provided in the product chapter (see column "detailed information") and in the Technical principles must, however, be observed in addition to this overview in selection of the bearing.

Design features and suitability			Machined needle roller bearings		
+++ extremely suitable ++ highly suitable + suitable (+) suitable with restrictions – not suitable/not applicable ✓ available			with ribs, with or without inner ring	without ribs, with or without inner ring	detailed information ➤ 924
Load carrying capacity	radial	F_r	+++	+++	➤ *931 | 1.2*
	axial, one direction	F_a	–	–	➤ *931 | 1.2*
	axial, both directions	F_a	–	–	➤ *931 | 1.2*
	moments	M	–	–	
Compensation of angular misalignments	static		–	–	➤ *931 | 1.3*
	dynamic		–	–	➤ *931 | 1.3*
Bearing design	cylindrical bore		✓	✓	➤ *924 | 1.1*
	tapered bore		–	–	
	separable		✓[1]	✓	➤ *924 | 1.1*
Lubrication	greased		✓[3]	–	➤ *932 | 1.4*
Sealing	open		✓	✓	➤ *932 | 1.5*
	non-contact		–	–	➤ *932 | 1.5*
	contact		✓	–	➤ *932 | 1.5*
Operating temperature in °C	from to		–30[6] +120	–30[6] +120	➤ *934 | 1.8*
Suitability for	high speeds	n	+++	+++	➤ *933 | 1.6*
	high running accuracy		++	++	➤ *936 | 1.11* ➤ *115*
	low-noise running		+	+	➤ *933 | 1.7* ➤ *27*
	high rigidity		+++	+++	➤ *54*
	reduced friction		++	++	➤ *56*
	length compensation within bearing		+++	+++	➤ *924 | 1.1* ➤ *25*
	non-locating bearing arrangement		+++	+++	➤ *141*
	locating bearing arrangement		–	–	➤ *141*
X-life bearings		X-life	✓	✓	➤ *930*
Inside diameter d and F_w in mm	from to		5 415	5 100	➤ *946*
Product tables	from page ➤		946	966	

1) Only the inner rings can be mounted separately
2) Valid for axial component only in bearings without an end cap
3) Sealed bearings only
4) NKX..-Z is greased
5) NKXR..-Z is greased
6) Valid for bearings with sheet steel cage. With plastic cage: –20 °C to +120 °C
7) For mounting in pairs
8) Valid for NKIB only

	Aligning needle roller bearings		Combined needle roller bearings				
	with or without inner ring	detailed information ➤ 924	needle roller/ axial deep groove ball bearings	needle roller/ axial cylindrical roller bearings	needle roller/ angular contact ball bearings	detailed information ➤ 974	
	+++	➤ 931 | 1.2	+++	+++	+++	➤ 978 | 2.2	F_r
	–	➤ 931 | 1.2	++	+++	+	➤ 978 | 2.2	F_a
	–	➤ 931 | 1.2	–	–	++ [8]	➤ 978 | 2.2	F_a
	–		–	–	–		M
	++	➤ 931 | 1.3	–	–	–	➤ 981 | 2.3	
	–	➤ 931 | 1.3	–	–	–	➤ 981 | 2.3	
	✓	➤ 924 | 1.1	✓	✓	✓	➤ 974 | 2.1	
	–		–	–	–		
	✓ [1]	➤ 924 | 1.1	✓ [2]	✓ [2]	✓ [1]	➤ 974 | 2.1	
	–	➤ 932 | 1.4	– [4]	– [5]	–	➤ 981 | 2.4	
	✓	➤ 932 | 1.5	✓	✓	✓	➤ 982 | 2.5	
	–	➤ 932 | 1.5	–	–	–	➤ 982 | 2.5	
	–	➤ 932 | 1.5	–	–	–	➤ 982 | 2.5	
	–20 +100	➤ 934 | 1.8	–30 +120	–30 +120	–30 +120	➤ 983 | 2.8	
	++	➤ 933 | 1.6	+++	++	+++	➤ 982 | 2.6	n
	+	➤ 936 | 1.11 ➤ 115	++	++	++	➤ 984 | 2.11 ➤ 115	
	(+)	➤ 933 | 1.7 ➤ 27	(+)	(+)	(+)	➤ 983 | 2.7 ➤ 27	
	+	➤ 54	+++	+++	+++	➤ 54	
	++	➤ 56	++	++	++	➤ 56	
	+++	➤ 924 | 1.1 ➤ 25	(+)	(+)	(+)	➤ 25	
	+++	➤ 141	–	–	–	➤ 141	
	–	➤ 141	(+) [7]	(+) [7]	+	➤ 141	
	✓	➤ 930	✓	✓	✓	➤ 978	X-life
	12 45	➤ 972	7 70	15 50	12 70	➤ 994	
	972		994	998	1000		

1 Needle roller bearings, aligning needle roller bearings

The bearings:
- can support high to very high radial forces
- are used when the load carrying capacity or accuracy of drawn cup needle roller bearings with open ends is no longer sufficient and the high load capacity of cylindrical roller bearings is not yet required
- can only support radial loads and, as a result, are highly suitable for use as non-locating bearings (they permit axial displacement of the shaft relative to the housing in the bearing)
- permit high speeds in spite of line contact
- compensate misalignments between the shaft and housing (aligning needle roller bearings)
- require only a very small radial design envelope, particularly if the bearing arrangement is designed without an inner ring
- are available in numerous sizes and designs
- result in particularly compact, cost-effective and economical bearing arrangements

For an overview of other product-specific features, see the Matrix for bearing preselection ➤*922*.

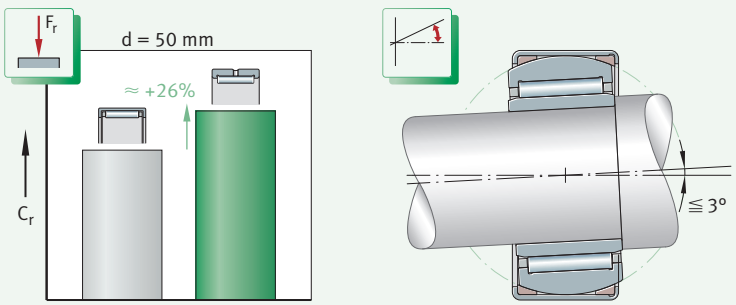

1
Needle roller bearing in X-life quality: comparison of load carrying capacity with drawn cup needle roller bearing (open ends) of almost identical dimensions; angular adjustment facility of aligning needle roller bearings (permissible adjustment angle)

C_r = *basic dynamic load rating*

1.1 Bearing design

✎ *Design variants*

Needle roller bearings are available as:
- needle roller bearings with ribs on the outer ring ➤*925*|*2* to ➤*927*|*5*
- needle roller bearings without ribs on the outer ring ➤*928*|*6* and ➤*928*|*7*
- aligning needle roller bearings ➤*929*|*8* and ➤*929*|*9*
- combined needle roller bearings ➤*974*

Needle roller bearings are X-life bearings ➤*930*.
In addition to the bearings described in this chapter, needle roller bearings are also available in other series, designs and sizes, as well as for specific applications, by agreement.

Needle roller bearings

Needle roller bearings are non-locating bearings

Needle roller bearings are rolling bearings with a low radial section height and high load carrying capacity, which are used as non-locating bearings and are part of the group of radial needle roller bearings. These bearings comprise machined outer rings, needle roller and cage assemblies and removable inner rings, i.e. they can be supplied with or without an inner ring in accordance with the application ➤925|2 to ➤929|8.
In contrast to the outer cups of drawn cup needle roller bearings, which are produced by forming methods, the bearing rings are machined.
Due to their non-locating bearing function, the bearings cannot guide the shaft axially in any direction.

Needle roller bearings with ribs on the outer ring

The needle roller and cage assembly is guided by the ribs

Needle roller bearings with ribs are ready-to-fit units. The outer ring and needle roller and cage assembly form a self-retaining unit. The needle roller and cage assembly is guided by the ribs on the outer ring. The outer ring has a lubrication groove and at least one lubrication hole. There is no relubrication facility in types NK with $F_w \leqq 10$ mm and NKI with $d \leqq 7$ mm.
The bearings are predominantly of a single row design, type RNA69 is of a double row design above an enveloping circle diameter $F_w = 40$ mm and is therefore fitted with two needle roller and cage assemblies.
The bearings are available:

- with or without an inner ring ➤925|2 and ➤926|4
- in a single or double row design ➤925|2 and ➤926|4
- as open or sealed versions ➤926|3, ➤926|4, ➤932|1.5

Needle roller bearings with ribs on the outer ring, without inner ring

Available types

Needle roller bearings with ribs on the outer ring and without an inner ring are available in the following types and dimension series:

- NK, NKS, RNA48, RNA49, RNA69 (single row) ➤925|2
- RNA69..-ZW (double row) ➤925|2
- RNA49..-RSR, RNA49..-2RSR (sealed on one or both sides) ➤926|3 and ➤932|1.5

For bearing arrangements with particularly compact radial dimensions

Bearings without an inner ring are highly suitable for bearing arrangements with particularly compact radial dimensions, if the shaft raceway can be hardened and ground ➤938|1.16. If no inner ring is used, the shaft can be designed to a greater thickness and thus with increased rigidity.

Length compensation (axial displacement facility)

Radial needle roller bearings are used as non-locating bearings, i.e. when the shaft must allow axial length compensation relative to the housing. For bearings without an inner ring, the axial displacement facility of the shaft is dependent on the width of the shaft raceway.

2
Needle roller bearings with ribs on the outer ring, without inner ring, open

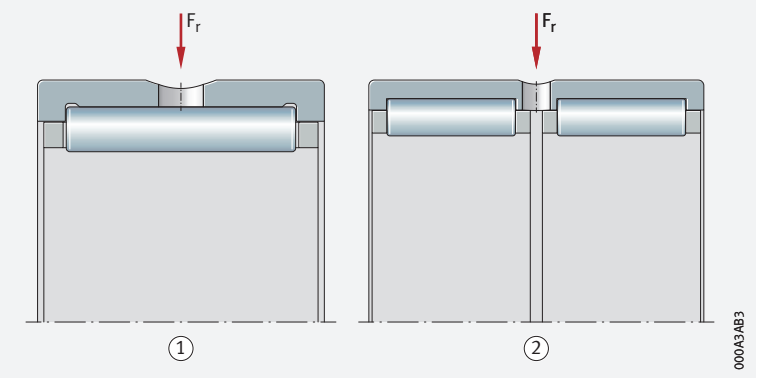

F_r = *radial load*

① *Single row needle roller bearing*

② *Double row needle roller bearing*

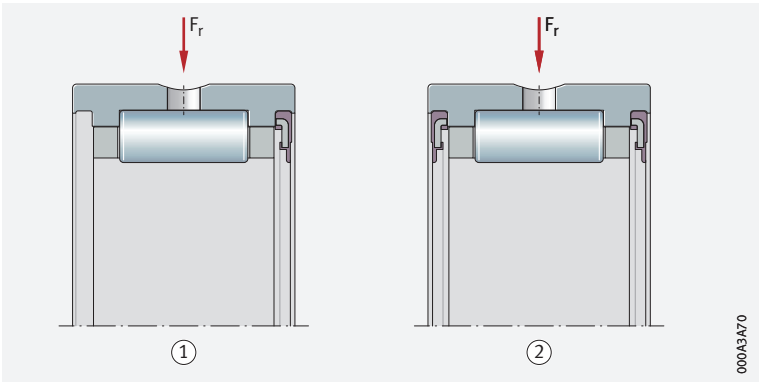

3
Needle roller bearings with ribs on the outer ring, without inner ring, sealed on one or both sides

F_r = *radial load*

① *Single row needle roller bearing, contact seal on one side*

② *Single row needle roller bearing, contact seal on both sides*

Needle roller bearings with ribs on the outer ring, with inner ring

Available types

Needle roller bearings with ribs on the outer ring and with an inner ring are available in the following types and dimension series:

- NKI, NKIS, NA48, NA49, NA69 (single row) ➤*926*|*4*
- NA69..-ZW (double row) ➤*926*|*4*
- NA49..-RSR, NA49..-2RSR (sealed on one or both sides) ➤*927*|*5* and ➤*932*|*1.5*

Bearings with an inner ring are used if the shaft cannot be configured as a rolling bearing raceway. The bearings are of a single row design, NA69 is of a double row design from d ≧ 32 mm.

Axial displacement of the inner ring

For bearings with an inner ring, the axial displacement of the shaft relative to the housing occurs during rotational motion, without constraint in the bearing, between the needle rollers and the inner ring raceway without ribs. The maximum axial displacement s is given in the product tables. Where larger displacements occur, the standard ring can be replaced by a wider inner ring IR. Inner rings ➤*1002*.

Replacement of inner rings

In the case of the standard bearings, the inner rings are matched to the enveloping circle tolerance F6 and can be interchanged with each other (mixed use) within the same accuracy class.

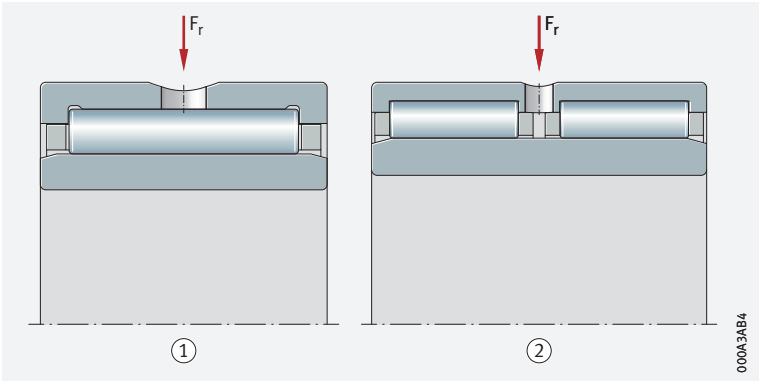

4
Needle roller bearings with ribs on the outer ring, with inner ring, open

F_r = *radial load*

① *Single row needle roller bearing*

② *Double row needle roller bearing*

5
Needle roller bearings with ribs on the outer ring, with inner ring, sealed on one or both sides

F_r = *radial load*

① *Single row needle roller bearing, contact seal on one side*

② *Single row needle roller bearing, contact seal on both sides*

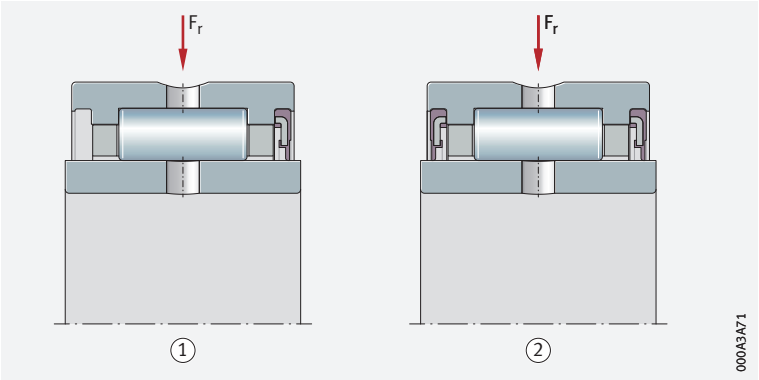

Needle roller bearings without ribs on the outer ring

The bearing components can be mounted independently of each other

Needle roller bearings without ribs on the outer ring are ready-to-fit units. The bearings are not self-retaining. This means that the outer ring, needle roller and cage assembly and inner ring can be fitted independently of each other. The needle roller and cage assembly can be mounted in different ways: it can be fitted together with the shaft, the outer ring or the inner ring, or it can be subsequently inserted between the outer ring and shaft or inner ring. The needle roller and cage assembly and outer ring must not, however, be interchanged with identical components from other bearings during mounting, but should always be fitted as supplied. The majority of the bearings are of a single row design. Double row bearings comprise two single row needle roller and cage assemblies arranged adjacent to each other. They have a lubrication groove in the circumference of the outer ring, at least one lubrication hole in the outer ring and the suffix ZW-ASR1 ➤*936*|*1.12*. Bearings are also available with a lubrication hole in the inner ring; these have the suffix IS1 ➤*936*|*1.12*.

Needle roller bearings without ribs on the outer ring are available:

- with and without an inner ring ➤*928*|*6* and ➤*928*|*7*
- in a single or double row design ➤*926*|*3* and ➤*927*|*5*

Needle roller bearings without ribs on the outer ring, without inner ring

Available types

Needle roller bearings without ribs on the outer ring and without an inner ring are available in the following types:

- RNAO (single row) ➤*928*|*6*
- RNAO..-ZW-ASR1 (double row) ➤*928*|*6*

For bearing arrangements with particularly compact radial dimensions

Bearings without an inner ring are highly suitable for bearing arrangements with particularly compact radial dimensions, if the shaft raceway can be hardened and ground ➤*938*|*1.16*. If no inner ring is used, the shaft can be designed to a greater thickness and thus with increased rigidity. If the shaft raceway is produced to the appropriate dimensional and geometrical accuracy, bearing arrangements with increased running accuracy can be achieved.

Length compensation (axial displacement facility)

Radial needle roller bearings are used as non-locating bearings, i. e. when the shaft must allow axial length compensation relative to the housing. For bearings without an inner ring, the axial displacement facility of the shaft is dependent on the width of the shaft raceway.

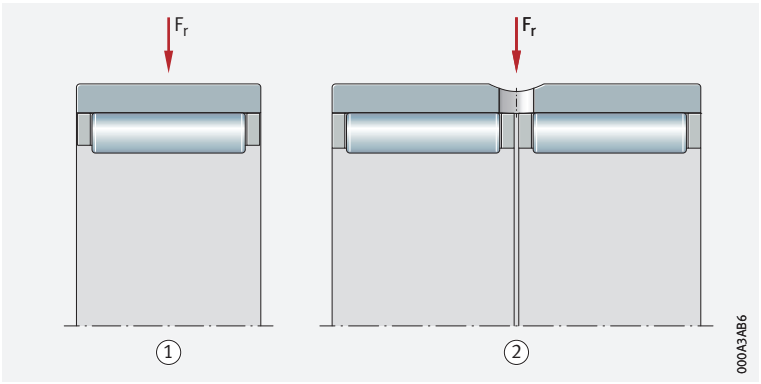

6
Needle roller bearings without ribs on the outer ring, without inner ring, open

F_r = *radial load*

① *Single row needle roller bearing*

② *Double row needle roller bearing*

Needle roller bearings without ribs on the outer ring, with inner ring

Available types

Needle roller bearings without ribs on the outer ring and with an inner ring are available in the following types:

- NAO (single row) ➤*928*|*7*
- NAO..-ZW-ASR1 (double row) ➤*928*|*7*

Bearings with an inner ring are used if the shaft cannot be configured as a rolling bearing raceway.

Axial displacement of the inner ring

For bearings with an inner ring, the axial displacement of the shaft relative to the housing occurs during rotational motion, without constraint in the bearing, between the needle rollers and the inner ring raceway without ribs. The maximum axial displacement s is given in the product tables ➤*970*|. Where larger displacements occur, the standard ring can be replaced by a wider inner ring IR. Inner rings ➤*1002*.

Replacement of inner rings

The outer ring and the needle roller and cage assembly are matched to each other and must not be interchanged during mounting with components from other bearings of the same size. In the case of the standard bearings, the inner rings are matched to the enveloping circle tolerance F6 and can be interchanged with each other (mixed use) within the same accuracy class.

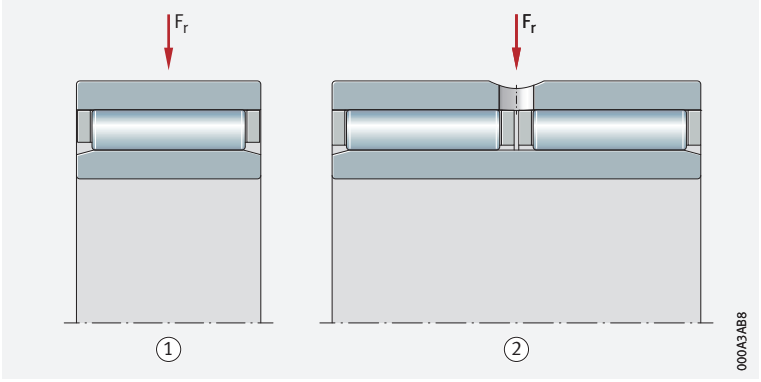

7
Needle roller bearings without ribs on the outer ring, with inner ring, open

F_r = *radial load*

① *Single row needle roller bearing*

② *Double row needle roller bearing*

Aligning needle roller bearings

Suitable for the compensation of angular misalignments

Aligning needle roller bearings comprise drawn outer cups, plastic support rings with a concave inner profile, outer rings with a spherical outside surface, needle roller and cage assemblies and removable inner rings ➤*929*|*8*. As a result of their design, these bearings can compensate misalignments, since the outer ring, with its spherical outside surface, is able to move in the concave plastic support ring ➤*931*|*1.3*. Due to their non-locating bearing function, the bearings cannot guide the shaft axially in any direction.

Aligning needle roller bearings without inner ring

✎ *Available types*

Aligning needle roller bearings are available in type RPNA ➤*929*|*8*.

✎ *For bearing arrangements with particularly compact radial dimensions*

Bearings without an inner ring are highly suitable for bearing arrangements with low section height and particularly compact dimensions, if the shaft raceway can be hardened and ground ➤*938*|*1.16*. If no inner ring is used, the shaft can be designed to a greater thickness and thus with increased rigidity.

8
Aligning needle roller bearing without inner ring

F_r = *radial load*

① *Drawn outer cup*
② *Plastic support rings with concave inner profile*
③ *Outer ring with spherical outside surface*
④ *Needle roller and cage assembly*

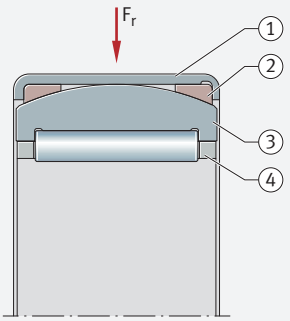

Aligning needle roller bearings with inner ring

✎ *Available types*

Aligning needle roller bearings are available in type PNA ➤*929*|*9*.

Bearings with an inner ring are used if the shaft cannot be configured as a rolling bearing raceway.

✎ *Axial displacement of the inner ring*

For bearings with an inner ring, the axial displacement of the shaft relative to the housing occurs during rotational motion, without constraint in the bearing, between the needle rollers and the inner ring raceway without ribs. The maximum axial displacement s is given in the product tables ➤*972*|. Where larger displacements occur, the standard ring can be replaced by a wider inner ring of series IR. Inner rings ➤*1002*.

Replacement of inner rings

In the case of the standard bearings, the inner rings are matched to the enveloping circle tolerance F6 and can be interchanged with each other (mixed use) within the same accuracy class.

9
Aligning needle roller bearing with inner ring

F_r = *radial load*

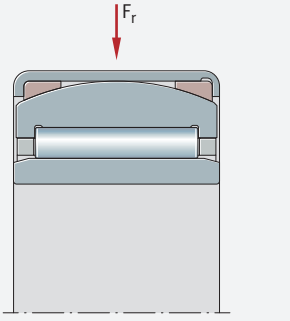

X-life premium quality

The radial needle roller bearings described here are X-life bearings. These bearings are characterised by a very high load carrying capacity and long rating life. This is achieved, for example, through the modified internal construction and optimised contact geometry between the needle rollers and raceways, as well as through the higher quality of the steel and rolling elements, higher surface quality and appropriate heat treatment and/or coating.

Advantages

Increased customer benefits due to X-life

The technical enhancements offer a range of advantages, such as:

- a more favourable load distribution in the bearing and thus a higher dynamic load carrying capacity of the bearings
- quieter running
- running with reduced friction and greater energy efficiency
- lower heat generation in the bearing
- higher possible speeds
- lower lubricant consumption and, consequently, longer maintenance intervals
- a measurably longer operating life
- high operational security
- compact, environmentally-friendly bearing arrangements

Lower operating costs, higher machine availability

In conclusion, these advantages improve the overall cost-efficiency of the bearing position significantly and thus bring about a sustainable increase in the efficiency of the machine and equipment.

Suffix XL

X-life radial needle roller bearings include the suffix XL in the designation ➤*930*|*10*, ➤*937*|*14* and ➤*946*|.

10

Calculated rating life and rating life verified in tests – comparison between X-life needle roller bearing and bearings without X-life quality

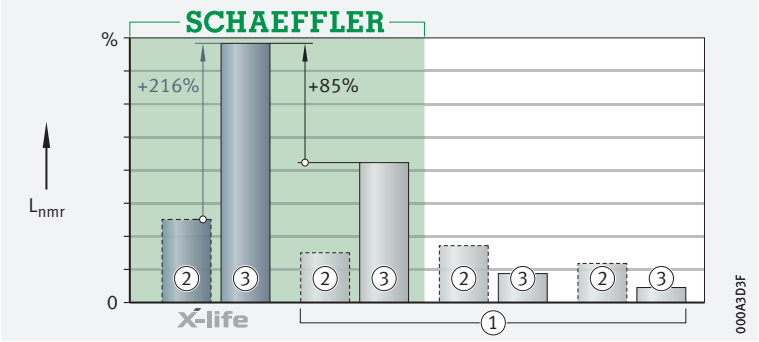

L_{nmr} = *adjusted reference rating life*

① *Bearing without X-life quality*
② *Calculated rating life*
③ *Rating life verified in tests*

Areas of application

Wide application range

Due to their special technical features, X-life needle roller bearings are highly suitable for bearing arrangements in:

- printing machinery
- the food and packaging industry
- compressors
- fluid and hydraulic pumps
- automotive chassis and gearboxes
- gearboxes for industrial, rail and wind turbine applications
- agricultural vehicles and equipment

X-life indicates a high product performance density and thus a particularly significant benefit to the customer. Further information on X-life ➤*10*.

1.2 Load carrying capacity

The bearings are pure radial bearings

Radial needle roller bearings support very high radial forces due to the presence of line contact, but may only be subjected to purely radial load. If the bearing position is also required to support axial forces, the needle roller bearings can, for example, be combined with axial needle roller bearings AXW ➤931|11. An extensive range of combined needle roller bearings is also available for combined loads ➤974.

If the surface of the shaft raceway is produced to DIN 617, the basic load ratings C_r in the product tables must be reduced by 15%.

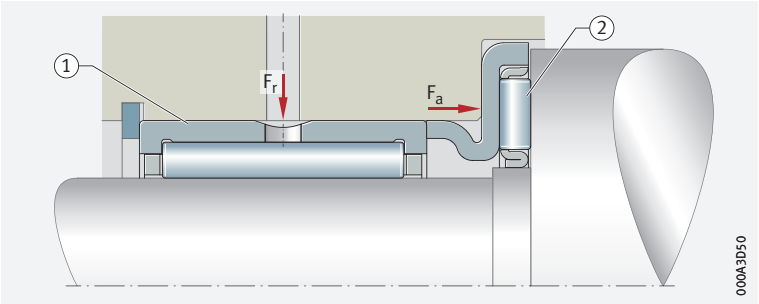

11
Radial needle roller bearing combined with axial needle roller bearing

F_r = *radial load*
F_a = *axial load*

① *Needle roller bearing NK*
② *Axial needle roller bearing AXW*

1.3 Compensation of angular misalignments

The bearings are not suitable for the compensation of shaft misalignments relative to the housing.

Needle roller bearings with or without ribs on the outer ring are not suitable for the compensation of angular misalignments. The extent to which a misalignment of the shaft can be tolerated relative to the housing bore is dependent on factors such as the design of the bearing arrangement, the size of the bearing, the operating clearance and the load. As a result, no guide value can be specified here for a possible misalignment. If angular misalignments occur, aligning needle roller bearings can be used ➤931|12.

In all cases, misalignments cause increased running noise, place increased strain on the cages and have a harmful influence on the operating life of the bearings.

Aligning needle roller bearings

Aligning needle roller bearings can compensate static misalignment

Due to the spherical outer ring and the concave support ring, aligning bearings can compensate static misalignments between the shaft and housing of up to 3° ➤931|12 and ➤924|1.1. The bearings must not, however, be used to support swivel or tumbling motion. During adjustment motion between the outer cup and the ring, a breakaway torque occurs. In order that adjustment motion can take place, the tolerances for the housing bore must be observed ➤940|5.

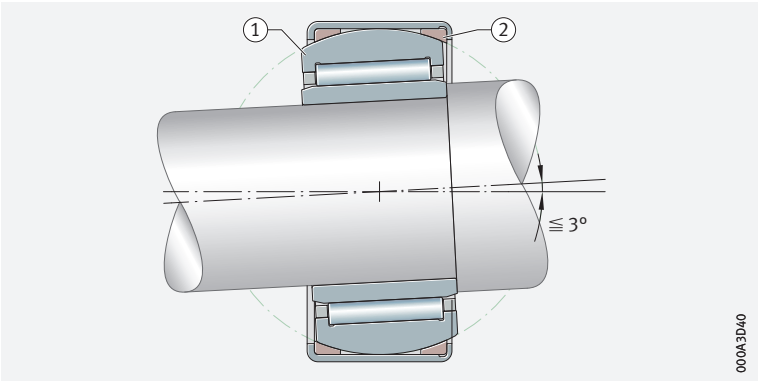

12
Compensation of misalignments

① *Spherical outer ring*
② *Concave support ring*

1.4 Lubrication

Needle roller bearings with or without ribs on the outer ring

Greased bearings

The sealed bearings are greased with a high quality lithium complex soap grease to GA08. Arcanol LOAD150 is suitable for relubrication.
For this purpose, the outer ring has a lubrication groove and a lubrication hole ➤*924|1.1*.

Do not wash greased bearings out prior to mounting. If mounting is carried out using thermal tools, the bearings should not be heated to a temperature in excess of +80 °C, taking account of the grease filling and seal material. If higher heating temperatures are required, it must be ensured that the permissible upper temperature limits for grease and seals are not exceeded.

Schaeffler recommends the use of induction heating devices for heating purposes➤*944*.

Ungreased bearings

Open bearings are not greased. They must be lubricated with oil or grease.

Compatibility with plastic cages

When using bearings with plastic cages, compatibility between the lubricant and the cage material must be ensured if synthetic oils, lubricating greases with a synthetic oil base or lubricants containing a high proportion of EP additives are used.

Observe oil change intervals

Aged oil and additives in the oil can impair the operating life of plastics at high temperatures. As a result, stipulated oil change intervals must be strictly observed.

If there is any uncertainty regarding the suitability of the selected lubricant for the application, please consult Schaeffler or the lubricant manufacturer.

1.5 Sealing

The bearings are open or sealed

Needle roller bearings are available in an unsealed design in accordance with DIN 617:2008 and ISO 3245:2015 and a sealed design in accordance with DIN 617:2008.

Sealed bearings

Integrated seals are particularly space-saving

Under normal operating conditions, contact seals give protection against contamination, spray water and the loss of lubricant. The integration of such seals into the bearing provides a compact, reliable, proven and economical sealing solution ➤*926|3* and ➤*927|5*.
The sealing material used is the oil-resistant and wear-resistant elastomer material NBR. The seal lips are in contact with a defined contact pressure against the sliding surface.

Unsealed bearings

Provide seals in the adjacent construction

In the case of unsealed bearings, sealing of the bearing position must be carried out in the adjacent construction. This must reliably prevent:

- moisture and contaminants from entering the bearing
- the egress of lubricant from the bearing

Sealing rings must not be used as running surfaces for the cage, as these will be damaged as a result and no longer able to fulfil their sealing function.

Sealing of the bearing position with a sealing ring G

✎ *Effective sealing elements for use in sealing open bearings*

Bearing positions with open needle roller bearings can be sealed cost-effectively with sealing rings G. The sealing rings are designed as contact seals and are arranged in front of the bearing ➤*933*|🗀 *13*.
They are suitable for circumferential velocities at the running surface of up to 10 m/s and protect the bearing position reliably against contamination, spray water and the excessive loss of lubricant. The sealing rings are matched to the low radial dimensions of needle roller bearings. They are very easy to fit, since they are simply pressed into the housing bore.

🗀 ***13***
Sealing of the bearing position with a sealing ring G

① *Needle roller bearing with ribs on the outer ring, open*
② *Sealing ring G*

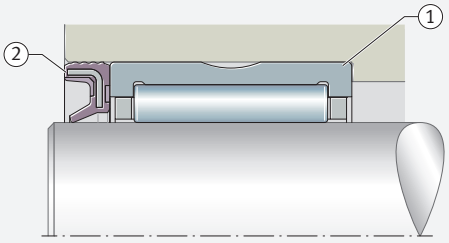

1.6 Speeds

✎ *Speeds in the product tables*

The product tables generally give two speeds for the bearings:
- the kinematic limiting speed n_G
- the thermal speed rating $n_{\vartheta r}$

Limiting speeds

The limiting speed n_G is the kinematically permissible speed of the bearing. Even under favourable mounting and operating conditions, this value should not be exceeded without prior consultation with Schaeffler ➤*64*.

The values given in the product tables are valid for oil lubrication in the case of bearings without seals and for grease lubrication where bearings are supplied greased and with seals.

✎ *Values for grease lubrication*

For grease lubrication, 60% of the value stated in the product tables is permissible in the case of aligning needle roller bearings.

Reference speeds

✎ *$n_{\vartheta r}$ is used to calculate n_ϑ*

The thermal speed rating $n_{\vartheta r}$ is not an application-oriented speed limit, but is a calculated ancillary value for determining the thermally safe operating speed n_ϑ ➤*64*.

✎ *Bearings with contact seals*

For bearings with contact seals, no reference speeds are defined in accordance with DIN ISO 15312:2004. As a result, only the limiting speed n_G is given in the product tables for these bearings.

1.7 Noise

Schaeffler Noise Index

The Schaeffler Noise Index (SGI) is not yet available for this bearing type ➤*69*. The data for these bearing series will be introduced and updated in stages.

Further information:
- ***medias*** *https://medias.schaeffler.com*

1.8 Temperature range

Limiting values

The operating temperature of the bearings is limited by:

- the dimensional stability of the bearing rings and rolling elements
- the cage
- the lubricant
- the seals

Possible operating temperatures of needle roller bearings with ribs ➤*934*| *1*.

1 *Permissible temperature ranges*

Operating temperature	Needle roller bearings with or without ribs, aligning needle roller bearings		
	open bearings	sealed bearings, aligning needle roller bearings	with plastic cage
	–30 °C to +120 °C	–20 °C to +100 °C limited by the lubricant, seal material and the plastic support ring	–30 °C to +120 °C

In the event of anticipated temperatures which lie outside the stated values, please contact Schaeffler.

1.9 Cages

Solid cages made from polyamide PA66 and sheet steel are used as standard

The standard cages are made from sheet steel or plastic (polyamide PA66). Bearings with a plastic cage have the suffix TV. Aligning needle roller bearings are fitted with sheet steel cages.

1.10 Internal clearance

Radial internal clearance

The standard is CN

Needle roller bearings with an inner ring are manufactured as standard with radial internal clearance CN (normal) ➤*934*| *2*. CN is not stated in the designation.

For bearings with ribs on the outer ring, certain sizes are also available by agreement with the larger internal clearance C3.

The values for radial internal clearance in bearings with an inner ring correspond to DIN 620-4:2004 (ISO 5753-1:2009) ➤*934*| *2*. They are valid for bearings which are free from load and measurement forces (without elastic deformation).

Bearings with inner ring

2 *Radial internal clearance of needle roller bearings with inner ring*

Nominal bore diameter d mm		Radial internal clearance			
		CN (Group N) µm		C3 (Group 3) µm	
over	incl.	min.	max.	min.	max.
–	24	20	45	35	60
24	30	20	45	35	60
30	40	25	50	45	70
40	50	30	60	50	80
50	65	40	70	60	90
65	80	40	75	65	100
80	100	50	85	75	110
100	120	50	90	85	125
120	140	60	105	100	145

continued ▼

2
Radial internal clearance of needle roller bearings with inner ring

Nominal bore diameter d mm		Radial internal clearance CN (Group N) µm		C3 (Group 3) µm	
over	incl.	min.	max.	min.	max.
140	160	70	120	115	165
160	180	75	125	120	170
180	200	90	145	140	195
200	225	105	165	160	220
225	250	110	175	170	235
250	280	125	195	190	260
280	315	130	205	200	275
315	355	145	225	225	305
355	400	190	280	280	370
400	450	210	310	310	410
450	500	220	330	330	440

continued ▲

✎ For bearings without an inner ring, the enveloping circle diameter F_w is used

Enveloping circle diameter F_w for bearings without an inner ring

In the case of bearings without inner ring, the dimension for the enveloping circle diameter F_w is used instead of the radial internal clearance. The enveloping circle is the inner inscribed circle of the needle rollers in clearance-free contact with the outer raceway. For bearings before fitting, the enveloping circle F_w is in the tolerance class F6.

Deviations ➤*935*|▦ *3*.

3
Deviations for the enveloping circle diameter

Enveloping circle diameter F_w mm		Tolerance class F6 Tolerance for enveloping circle diameter F_w	
		upper deviation	lower deviation
over	incl.	µm	µm
3	6	+18	+10
6	10	+22	+13
10	18	+27	+16
18	30	+33	+20
30	50	+41	+25
50	80	+49	+30
80	120	+58	+36
120	180	+68	+43
180	250	+79	+50
250	315	+88	+56
315	400	+98	+62
400	500	+108	+68

Bearings without ribs on the outer ring

If the enveloping circle is to be in tolerance class F6, the outer ring/needle roller cage assembly as a matched pair (as delivered) must not be interchanged with parts from other matched pairs during mounting of the bearings.

1.11 Dimensions, tolerances

Dimension standards

The main dimensions of needle roller bearings correspond to ISO 15:2017. The main dimensions of types RNA48, NA48, RNA49, NA49, RNA69, NA69 correspond to DIN 617:2008 and ISO 1206:2001.

Nominal dimensions of needle roller bearings with ribs ➤*946*.

Chamfer dimensions

The limiting dimensions for chamfer dimensions correspond to DIN 620-6:2004. The maximum chamfer dimensions for the inner rings to DIN 620-6:2004 must be taken into consideration. Overview and limiting values ➤*137*|*7.11*. Nominal value of chamfer dimension ➤*946*.

Tolerances

The tolerances for the dimensional and running accuracy of needle roller bearings correspond to ISO 492:2014. This excludes the types RNA48, NA48, RNA49, NA49, RNA69, NA69 and aligning needle roller bearings; the dimensional and running tolerances of these bearings correspond to ISO 1206:2001. Needle roller bearings with ribs are available by agreement with increased dimensional, geometrical and running accuracy (suffix P5). This excludes the outside diameter and the width of the outer cup in aligning needle roller bearings. The width has a tolerance of ±0,5 mm.

1.12 Suffixes

Suffixes describe the design and features of a bearing in more detail.

4 *Suffixes and corresponding descriptions*

Suffix	Description of suffix	
ASR1	Lubrication hole and lubrication groove in the outer ring, dependent on the size	Standard
C3	Radial internal clearance C3 (larger than normal)	Special design, available by agreement
D	Bearing with improved steel cage for downsizing option	
IS1	Lubrication hole in the inner ring, dependent on the size	Standard
P5	Bearing with high dimensional, geometrical and running accuracy	Special design, available by agreement
RSR	Contact seal on one side (lip seal)	Standard
TV	Bearing with cage made from glass fibre reinforced polyamide PA66	
TW	Bearing with cage made from glass fibre reinforced polyamide PA66 and two short needle rollers per cage pocket	Available by agreement
XL	X-life bearing	Standard
ZW	Double row design, dependent on the size	
2RSR	Contact seal on both sides (lip seal)	

1.13 Structure of bearing designation

With ***medias*** interchange, equivalent Schaeffler bearing designations can be determined for bearing designations from other rolling bearing manufacturers *https://www.schaeffler.de/std/1B69*.

Examples of composition of bearing designation

The designation of bearings follows a set model. Examples ➤*937*| *14* to ➤*937*| *17*. The composition of designations is subject in part to DIN 623-1 ➤*102*| *10*.

14
Single row needle roller bearing with ribs on the outer ring, without inner ring, open: designation structure

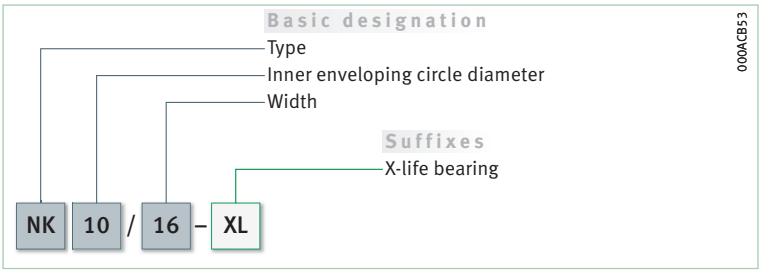

15
Single row needle roller bearing with ribs on the outer ring, without inner ring, sealed on both sides: designation structure

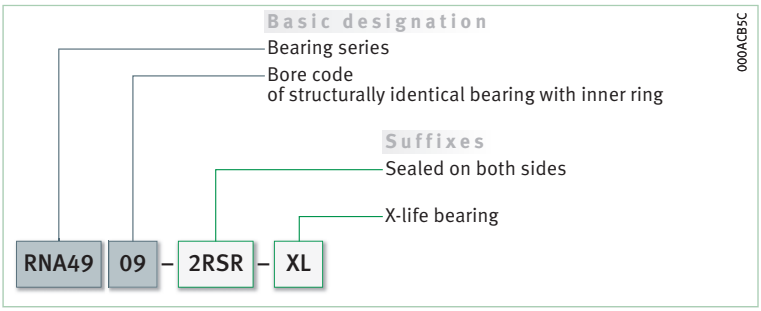

16
Double row needle roller bearing without ribs on the outer ring, without inner ring, open: designation structure

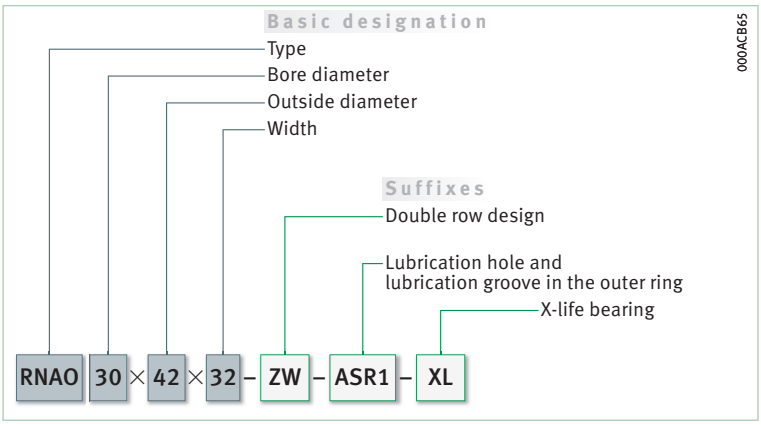

17
Aligning needle roller bearing with inner ring: designation structure

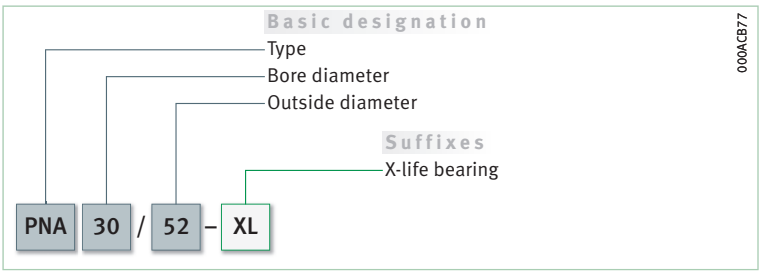

1.14 Dimensioning

Equivalent dynamic bearing load

✎ *$P = F_r$ under purely radial load of constant magnitude and direction*

The basic rating life equation $L = (C_r/P)^p$ used in the dimensioning of bearings under dynamic load assumes a load of constant magnitude and direction. In radial bearings, this is a purely radial load F_r. If this condition is met, the bearing load F_r is used in the rating life equation for P ($P = F_r$) ➤*938*| *1*.

Needle roller bearings and aligning needle roller bearings are non-locating bearings and may only be subjected to radial load.

1
Equivalent dynamic load

$$P = F_r$$

Legend

P	N	Equivalent dynamic bearing load
F_r	N	Radial load.

Equivalent static bearing load

For needle roller bearings subjected to static load ➤*938*| *2*.

2
Equivalent static load

$$P_0 = F_{0r}$$

Legend

P_0	N	Equivalent static bearing load
F_{0r}	N	Largest radial load present (maximum load).

Static load safety factor

✎ *$S_0 = C_0/P_0$*

In addition to the basic rating life L (L_{10h}), it is also always necessary to check the static load safety factor S_0 ➤*938*| *3*.

3
Static load safety factor

$$S_0 = \frac{C_0}{P_0}$$

Legend

S_0	–	Static load safety factor
C_0	N	Basic static load rating
P_0	N	Equivalent static bearing load.

1.15 Minimum load

✎ *In order to prevent damage due to slippage, a minimum radial load of $P > C_{0r}/60$ is required*

In order that no slippage occurs between the contact partners, the needle roller bearings must be constantly subjected to a sufficiently high load. Based on experience, a minimum radial load of the order of $P > C_{0r}/60$ is thus necessary. In most cases, however, the radial load is already higher than the requisite minimum load due to the weight of the supported parts and the external forces.

If the minimum radial load is lower than indicated above, please consult Schaeffler.

1.16 Design of bearing arrangements

✎ *Support bearing rings over their entire circumference and width*

In order to allow full utilisation of the load carrying capacity of the bearings and achieve the requisite rating life, the bearing rings must be rigidly and uniformly supported by means of contact surfaces over their entire circumference and over the entire width of the raceway. Support can be provided by means of a cylindrical seating surface. The seating and contact surfaces should not be interrupted by grooves, holes or other recesses. The accuracy of mating parts must meet specific requirements ➤*940*| *5* to ➤*941*| *8*.

Radial location

✎ *For secure radial location, tight fits are necessary*

Needle roller bearings with an inner ring are radially located by means of fits on the shaft and in the housing.

In addition to supporting the rings adequately, the bearings must also be securely located in a radial direction, to prevent creep of the bearing rings on the mating parts under load. This is generally achieved by means of tight fits between the bearing rings and the mating parts. If the rings are not secured adequately or correctly, this can cause severe damage to the bearings and adjacent machine parts. Influencing factors, such as the conditions of rotation, magnitude of the load, internal clearance, temperature conditions, design of the mating parts and the mounting and dismounting options must be taken into consideration in the selection of fits.

If shock type loads occur, tight fits (transition fit or interference fit) are required to prevent the rings from coming loose at any point. Clearance, transition or interference fits ➤*152*|▦ *6* and ➤*160*|▦ *7*.

The following information provided in Technical principles must be taken into consideration in the design of bearing arrangements:

- criteria for selection of fits ➤*146*
- conditions of rotation ➤*147*
- tolerance classes for cylindrical shaft seats (radial bearings) ➤*149*|▦ *2*
- shaft fits ➤*152*|▦ *6*
- tolerance classes for bearing seats in housings (radial bearings) ➤*150*|▦ *4*
- housing fits ➤*160*|▦ *7*

Axial location – location methods

✎ *The bearings must also be securely located in an axial direction*

As a tight fit alone is not normally sufficient to also locate the bearing rings securely on the shaft and in the housing bore in an axial direction, this must usually be achieved by means of an additional axial location or retention method. The axial location of the bearing rings must be matched to the type of bearing arrangement. Shaft and housing shoulders, housing covers, nuts, spacer rings and retaining rings etc., are fundamentally suitable ➤*939*|⧉ *18* and ➤*939*|⧉ *19*.

⧉ **18**
Axial location of the bearing rings in bearings with ribs on the outer ring

① *Retaining ring*

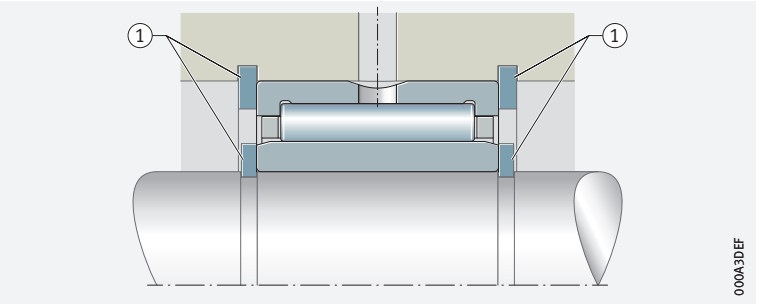

⧉ **19**
Axial location of the bearing rings in bearings without ribs on the outer ring

① *Retaining ring*
② *Axial washer*

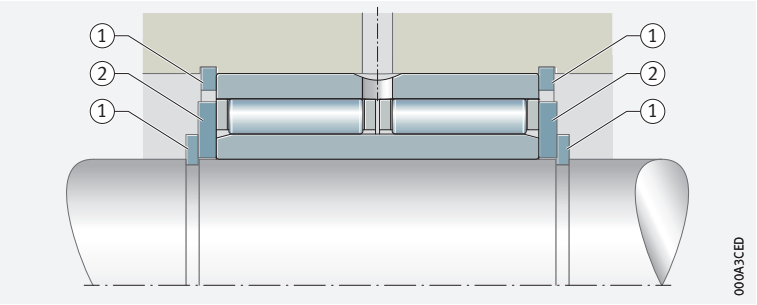

Axial guidance of the needle roller and cage assemblies in bearings without ribs on the outer ring

The needle roller and cage assemblies must be axially guided on lateral, burr-free running surfaces. The running surfaces for the cage must be precision machined (Ra 2) and resistant to wear. The product tables give the maximum value of the radius r_a, the diameters of the abutment shoulders d_a, D_a and the dimension d_b, D_b for axial guidance of the needle roller and cage assembly. Mounting dimensions ➤*966*.

Tolerances of the housing bore for aligning needle roller bearings

5
Tolerance classes and surface design for housings, as a function of the material – for aligning needle roller bearings

Housing material	Bore tolerance to ISO 286-2	Roundness tolerance max.	Parallelism tolerance max.	Recommended mean roughness value Ramax (Rzmax) µm
Steel or cast iron	N6 Ⓔ	IT5/2	IT5/2	0,8 (4)
Light metal	R6 Ⓔ			

Dimensional, geometrical and running accuracy of cylindrical bearing seats

A minimum of IT6 should be provided for the shaft seat and a minimum of IT7 for the housing seat

The accuracy of the cylindrical bearing seat on the shaft and in the housing should correspond to the accuracy of the bearing used. For needle roller bearings with ribs with the tolerance class Normal, the shaft seat should correspond to a minimum of standard tolerance grade IT6 and the housing seat to a minimum of IT7. Guide values for the geometrical and positional tolerances of the bearing seating surfaces ➤*940*. Tolerances t_1 to t_3 in accordance with ➤*170* *11*. Numerical values for IT grades ➤*941* *7*.

6
Guide values for the geometrical and positional tolerances of bearing seating surfaces

Bearing tolerance class		Bearing seating surface	Standard tolerance grades to ISO 286-1 (IT grades)			
to ISO 492	to DIN 620		Diameter tolerance	Roundness tolerance t_1	Parallelism tolerance t_2	Total axial runout tolerance of abutment shoulder t_3
Normal	PN (P0)	Shaft	IT6 (IT5)	Circumferential load IT4/2	Circumferential load IT4/2	IT4
				Point load IT5/2	Point load IT5/2	
		Housing	IT7 (IT6)	Circumferential load IT5/2	Circumferential load IT5/2	IT5
				Point load IT6/2	Point load IT6/2	
–	P5	Shaft	IT5	Circumferential load IT2/2	Circumferential load IT2/2	IT2
				Point load IT3/2	Point load IT3/2	
		Housing	IT6	Circumferential load IT3/2	Circumferential load IT3/2	IT3
				Point load IT4/2	Point load IT4/2	

7
Numerical values for ISO standard tolerances (IT grades) to ISO 286-1:2010

IT grade	Nominal dimension in mm											
	over	3	6	10	18	30	50	80	120	180	250	315	400
	incl.	6	10	18	30	50	80	120	180	250	315	400	500
	Values in µm												
IT2		1,5	1,5	2	2,5	2,5	3	4	5	7	8	9	10
IT3		2,5	2,5	3	4	4	5	6	8	10	12	13	15
IT4		4	4	5	6	7	8	10	12	14	16	18	20
IT5		5	6	8	9	11	13	15	18	20	23	25	27
IT6		8	9	11	13	16	19	22	25	29	32	36	40
IT7		12	15	18	21	25	30	35	40	46	52	57	63

Roughness of cylindrical bearing seating surfaces

Ra must not be too high

The roughness of the bearing seats must be matched to the tolerance class of the bearings. The mean roughness value Ra must not be too high, in order to maintain the interference loss within limits. The shafts must be ground, while the bores must be precision turned. Guide values as a function of the IT grade of bearing seating surfaces ➤*941*|▦*8*.

8
Roughness values for cylindrical bearing seating surfaces – guide values

Nominal diameter of the bearing seat d (D) mm		Recommended mean roughness value for ground bearing seats Ramax µm			
		Diameter tolerance (IT grade)			
over	incl.	IT7	IT6	IT5	IT4
–	80	1,6	0,8	0,4	0,2
80	500	1,6	1,6	0,8	0,4

Mounting dimensions

The contact surfaces for the rings must be of sufficient height

The mounting dimensions of the shaft and housing shoulders, and spacer rings etc., must ensure that the contact surfaces for the bearing rings are of sufficient height. However, they must also reliably prevent rotating parts of the bearing from grazing stationary parts. The abutment shoulders (shaft, housing) should be perpendicular to the bearing axis.

The transition from the bearing seat to the abutment shoulder must be designed with rounding to DIN 5418 or an undercut to DIN 509.

Chamfer dimensions

The chamfer dimensions r are given in the product tables. These dimensions are limiting dimensions (minimum dimensions); the actual values should not be lower than specified. The overlap between the snap rings and the end faces of the bearing rings must be sufficiently large.

Raceway for bearings without an inner ring (direct bearing arrangement)

The raceway must be suitable as a rolling bearing raceway

In the case of needle roller bearings without an inner ring, the rolling element raceway on the shaft must be hardened and ground. Tolerances and surface designs are shown in ➤*942*|▦*9*. The surface hardness of the raceway must be 670 HV to 840 HV, the hardening depth CHD or SHD must be sufficiently large.

The values in the tables are valid for housing tolerances up to K7 Ⓔ. For tighter bores, the operating clearance should be checked by either calculation or measurement.

9
Tolerance classes and surface design of raceways for needle roller bearings without an inner ring

Shaft diameter		Shaft tolerance[1]			Design of raceway		
					Roundness tolerance	Parallelism tolerance	Recommended mean roughness value
Nominal dimension		Operating clearance					Ramax (Rzmax)
mm							
over	incl.	small	normal	large	max.	max.	µm
–	65	k5	h5	g6	IT3	IT3	0,1 (0,4)
65	80	k5	h5	f6			
80	120	k5	g5	f6			0,15 (0,63)
120	160	k5	g5	f6			0,2 (1)
160	180	k5	g5	e6			
180	200	j5	g5	e6			
200	250	j5	f6	e6			
250	315	h5	f6	e6			
315	415	g5	f6	d6			

1) *The envelope requirement Ⓔ applies.*

Shaft raceway to DIN 617

If the surface of the shaft raceway is produced to DIN 617, the basic load ratings C_r in the product tables must be reduced by 15% ➤*931|1.2*.

Steels for the raceway

Through hardening steels

Through hardening steels in accordance with ISO 683-17 (e.g. 100Cr6) are suitable as materials for rolling bearing raceways in direct bearing arrangements. These steels can also be surface layer hardened.

Case hardening steels

Case hardening steels must correspond to DIN EN ISO 683-17 (such as 17MnCr5, 18CrNiMo7-6) or DIN EN ISO 683-3 (such as 16MnCr5).

Steels for inductive surface layer hardening

For flame and induction hardening, steels in accordance with DIN EN ISO 683-17 (e.g. C56E2, 43CrMo4) or DIN 17212 (e.g. Cf53) should be used.

Surface hardness and hardening depth

✎ *Nominal surface hardness: ≧ 670 HV*

The requisite minimum surface hardness of 670 HV is valid for raceways, axial washers and shaft shoulders. Steels hardened by means of case, flame or induction hardening must have a surface hardness of 670 HV to 840 HV and an adequate hardening depth CHD or SHD.

Raceway hardness of less than 670 HV

If the raceway fulfils the requirements for rolling bearing materials but the raceway hardness is less than 670 HV (58 HRC), the static and dynamic load carrying capacity of the bearing is reduced. In order to determine the dynamic and static load carrying capacity of the bearing arrangement, the basic dynamic load rating C of the bearings must be multiplied by the reduction factor f_H (dynamic hardness factor) and the basic static load rating C_{0r} by the reduction factor f_{H0} (static hardness factor).

20
Dynamic hardness factor for raceway hardness values of less than 670 HV

f_H = *dynamic hardness factor*
HV, HRC = *surface hardness*

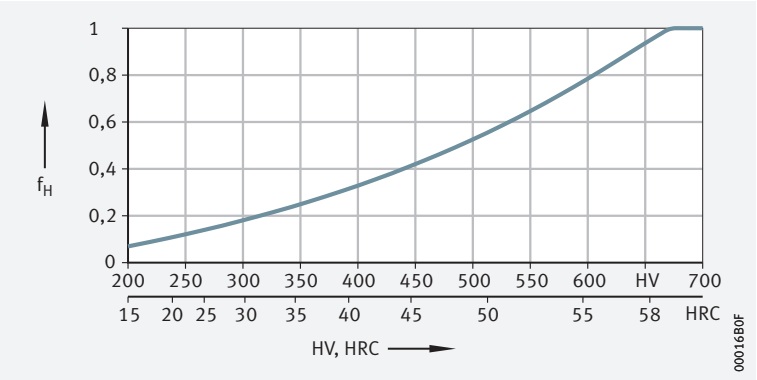

21
Static hardness factor for raceway hardness values of less than 670 HV

f_{H0} = *static hardness factor*
HV, HRC = *surface hardness*

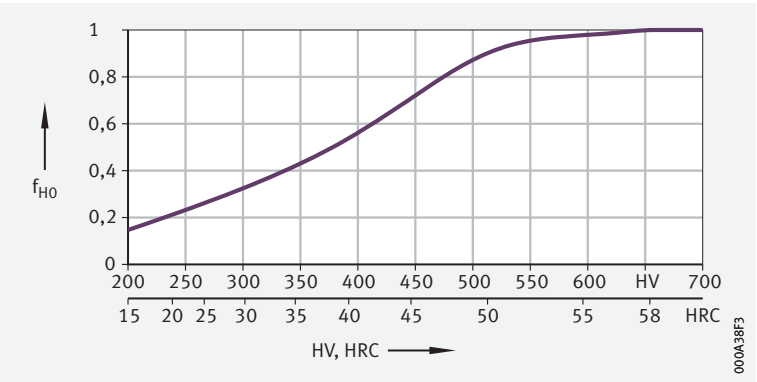

Determining the case hardening depth

Approximation value for case hardening depth

The reference value for the load present is the equivalent stress in accordance with the distortion energy hypothesis (DEH) as a function of the rolling element diameter D_w and the magnitude of the load.

For calculation of the case hardening depth CHD, the following applies:

4
Case hardening depth

$$CHD \geqq 0{,}052 \cdot D_w$$

Legend

CHD	mm	Case hardening depth
D_w	mm	Rolling element diameter.

The local hardness must always be above the local requisite hardness, which can be calculated from the equivalent stress.

Determining the surface hardening depth

In these surface hardening methods, the load and contact geometry must be taken into consideration when determining the requisite hardening depth.

For the calculation of the surface hardening depth SHD applies:

5
Surface hardening depth

$$SHD \geqq 140 \cdot D_w / R_{p0,2}$$

Legend

SHD	mm	Surface hardening depth
D_w	mm	Rolling element diameter
$R_{p0,2}$	N/mm²	Yield point of base material.

1.17 Mounting and dismounting

The mounting and dismounting options for needle roller bearings with ribs, by thermal, hydraulic or mechanical methods, must be taken into consideration in the design of the bearing position.

Aligning needle roller bearings

Mounting using pressing mandrel

Due to the drawn outer cup, the bearings must be mounted using a special pressing mandrel ➤*908*. The marked side of the bearing should be in contact with the flange of the mandrel. A toroidal ring on the mandrel holds the bearing securely on the mandrel.

Schaeffler Mounting Handbook

Rolling bearings must be handled with great care

Rolling bearings are well-proven precision machine elements for the design of economical and reliable bearing arrangements, which offer high operational security. In order that these products can function correctly and achieve the envisaged operating life without detrimental effect, they must be handled with care.

The Schaeffler Mounting Handbook MH 1 gives comprehensive information about the correct storage, mounting, dismounting and maintenance of rotary rolling bearings *https://www.schaeffler.de/std/1D53*. It also provides information which should be observed by the designer, in relation to the mounting, dismounting and maintenance of bearings, in the original design of the bearing position. This book is available from Schaeffler on request.

1.18 Legal notice regarding data freshness

The further development of products may also result in technical changes to catalogue products

Of central interest to Schaeffler is the further development and optimisation of its products and the satisfaction of its customers. In order that you, as the customer, can keep yourself optimally informed about the progress that is being made here and with regard to the current technical status of the products, we publish any product changes which differ from the printed version in our electronic product catalogue.

We therefore reserve the right to make changes to the data and illustrations in this catalogue. This catalogue reflects the status at the time of printing. More recent publications released by us (as printed or digital media) will automatically precede this catalogue if they involve the same subject. Therefore, please always use our electronic product catalogue to check whether more up-to-date information or modification notices exist for your desired product.

Link to electronic product catalogue

The following link will take you to the Schaeffler electronic product catalogue: *https://medias.schaeffler.com*.

1.19 Further information

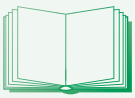

In addition to the data in this chapter, the following chapters in Technical principles must also be observed in the design of bearing arrangements:

- Determining the bearing size ➤*34*
- Rigidity ➤*54*
- Friction and increases in temperature ➤*56*
- Speeds ➤*64*
- Bearing data ➤*97*
- Lubrication ➤*70*
- Sealing ➤*185*
- Design of bearing arrangements ➤*141*
- Mounting and dismounting ➤*194*



Needle roller bearings with ribs

Without inner ring
Open

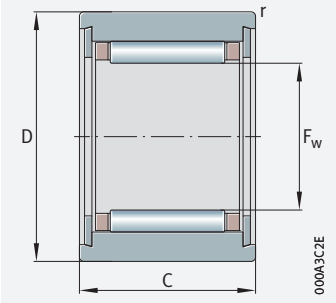

NK (F_w ≦ 10 mm)

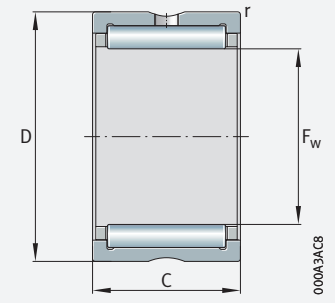

NK (F_w ≧ 12 mm), RNA49, RNA69

F_w = 5 – 19 mm

Main dimensions			Basic load ratings		Fatigue limit load	Limiting speed	Speed rating	Mass	Designation
F_w	D	C	dyn. C_r	stat. C_{0r}	C_{ur}	n_G	$n_{\vartheta r}$	m	➤*936* | *1.12* ➤*937* | *1.13* X-life ➤*930*
			N	N	N	min^{-1}	min^{-1}	≈ g	
5	10	10	2 650	1 920	300	39 000	55 000	3,1	**NK5/10-TV-XL**[2]
	10	12	3 400	2 650	440	39 000	54 000	3,7	**NK5/12-TV-XL**[2]
6	12	10	2 950	2 280	360	36 500	48 500	4,7	**NK6/10-TV-XL**[2]
	12	12	3 800	3 150	530	36 500	47 500	5,7	**NK6/12-TV-XL**[2]
7	14	10	3 250	2 650	420	34 500	43 000	6,9	**NK7/10-TV-XL**[2]
	14	12	4 150	3 600	610	34 500	42 000	8,2	**NK7/12-TV-XL**[2]
8	15	12	4 450	4 100	700	32 500	37 000	8,7	**NK8/12-TV-XL**[2]
	15	16	5 800	5 800	990	32 500	36 500	12	**NK8/16-TV-XL**[2]
9	16	12	5 100	5 000	860	31 000	32 000	10,3	**NK9/12-TV-XL**[2]
	16	16	6 600	7 100	1 210	31 000	32 000	12,8	**NK9/16-TV-XL**[2]
10	17	12	5 300	5 500	940	29 500	29 000	10,1	**NK10/12-TV-XL**[2]
	17	16	7 000	7 800	1 330	29 500	28 500	13,3	**NK10/16-TV-XL**[2]
12	19	12	7 200	7 100	1 310	26 500	22 400	12,1	**NK12/12-XL**
	19	16	10 100	11 000	1 950	26 500	21 600	15,9	**NK12/16-XL**
14	22	16	15 400	17 100	2 900	24 600	16 800	21,4	**NK14/16-D-XL**
	22	16	11 400	11 500	2 140	24 600	18 600	20,7	**NK14/16-XL**
	22	20	14 500	15 600	2 750	24 600	18 300	25,5	**NK14/20-XL**
	22	13	9 600	9 200	1 660	24 600	17 800	16,5	**RNA4900-XL**
15	23	16	12 100	12 700	2 360	23 900	17 300	21,8	**NK15/16-XL**
	23	20	15 400	17 200	3 050	23 900	17 000	26,6	**NK15/20-XL**
16	24	16	12 800	13 900	2 600	23 200	16 200	22,4	**NK16/16-XL**
	24	20	16 300	18 800	3 350	23 200	15 900	28,4	**NK16/20-XL**
	24	13	10 600	10 900	1 970	23 200	15 300	17,4	**RNA4901-XL**
	24	22	18 100	21 600	3 850	23 200	14 300	31	**RNA6901-XL**
17	25	16	13 500	15 000	2 800	22 600	15 300	23,7	**NK17/16-XL**
	25	20	17 100	20 400	3 600	22 600	15 000	29,8	**NK17/20-XL**
18	26	16	14 100	16 200	3 050	22 100	14 400	24,9	**NK18/16-XL**
	26	20	17 900	22 000	3 900	22 100	14 100	31,4	**NK18/20-XL**
19	27	16	14 700	17 400	3 250	21 600	13 700	26,1	**NK19/16-XL**
	27	20	18 700	23 600	4 200	21 600	13 400	32,2	**NK19/20-XL**

medias *https://www.schaeffler.de/std/1F9A*

[1] For unsealed needle roller bearings, dimensionally matched sealing rings of series G or SD can be used to provide protection against contamination.

[2] With closing rings, without lubrication hole and groove.

Dimensions		Suitable sealing rings[1)]	
F_w	r min.		
5	0,15	**GR5×10×2**	–
	0,15	**GR5×10×2**	–
6	0,15	**GR6×12×2**	–
	0,15	**GR6×12×2**	–
7	0,3	**GR7×14×2**	–
	0,3	**GR7×14×2**	–
8	0,3	**G8×15×3**	**SD8×15×3**
	0,3	**G8×15×3**	**SD8×15×3**
9	0,3	**G9×16×3**	–
	0,3	**G9×16×3**	–
10	0,3	**G10×17×3**	**SD10×17×3**
	0,3	**G10×17×3**	**SD10×17×3**
12	0,3	**G12×19×3**	**SD12×19×3**
	0,3	**G12×19×3**	**SD12×19×3**
14	0,3	**G14×22×3**	**SD14×22×3**
	0,3	**G14×22×3**	**SD14×22×3**
	0,3	**G14×22×3**	**SD14×22×3**
	0,3	**G14×22×3**	**SD14×22×3**
15	0,3	**G15×23×3**	**SD15×23×3**
	0,3	**G15×23×3**	**SD15×23×3**
16	0,3	**G16×24×3**	**SD16×24×3**
	0,3	**G16×24×3**	**SD16×24×3**
	0,3	**G16×24×3**	**SD16×24×3**
	0,3	**G16×24×3**	**SD16×24×3**
17	0,3	**G17×25×3**	**SD17×25×3**
	0,3	**G17×25×3**	**SD17×25×3**
18	0,3	**G18×26×4**	**SD18×26×4**
	0,3	**G18×26×4**	**SD18×26×4**
19	0,3	**G19×27×4**	**SD19×27×4**
	0,3	**G19×27×4**	**SD19×27×4**

Needle roller bearings with ribs

Without inner ring
Open

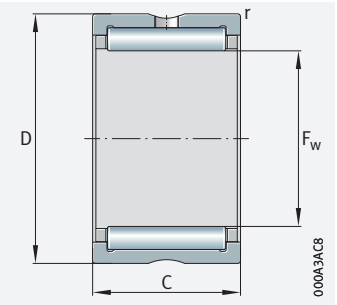

NK, NKS, RNA49, RNA69

F_w = 20 – 29 mm

Main dimensions			Basic load ratings		Fatigue limit load	Limiting speed	Speed rating	Mass	Designation
F_w	D	C	dyn. C_r	stat. C_{0r}	C_{ur}	n_G	$n_{\vartheta r}$	m	➤*936*|*1.12* ➤*937*|*1.13* X-life ➤*930*
			N	N	N	min^{-1}	min^{-1}	≈ g	
20	28	16	18 500	23 900	4 100	21 100	12 100	28,4	**NK20/16-D-XL**
	28	16	14 600	17 500	3 300	21 100	13 200	27	**NK20/16-XL**
	28	20	18 600	23 800	4 200	21 100	12 900	33,9	**NK20/20-XL**
	28	13	12 000	13 600	2 470	21 100	12 000	21,7	**RNA4902-XL**
	28	23	19 500	25 500	4 550	21 100	11 700	39,7	**RNA6902-XL**
	32	20	26 000	25 000	4 500	20 000	11 800	48,7	**NKS20-XL**
21	29	16	15 200	18 700	3 500	20 600	12 600	28,1	**NK21/16-XL**
	29	20	19 300	25 500	4 500	20 600	12 300	35,2	**NK21/20-XL**
22	30	16	15 800	19 900	3 750	20 000	12 000	30	**NK22/16-XL**
	30	20	20 000	27 000	4 800	20 000	11 700	37	**NK22/20-XL**
	30	13	12 400	14 600	2 650	20 000	10 900	22,2	**RNA4903-XL**
	30	23	21 100	29 000	5 200	20 000	10 500	42,4	**RNA6903-XL**
	35	20	27 500	28 000	5 000	18 500	10 900	61,5	**NKS22-XL**
24	32	16	16 900	22 300	4 200	18 500	11 000	31,9	**NK24/16-XL**
	32	20	21 400	30 500	5 400	18 500	10 700	40	**NK24/20-XL**
	37	20	29 500	31 000	5 500	17 200	10 100	65,5	**NKS24-XL**
25	33	16	16 800	22 400	4 200	17 800	10 700	32,6	**NK25/16-XL**
	33	20	21 300	30 500	5 400	17 800	10 400	42	**NK25/20-XL**
	37	17	23 700	25 500	4 700	16 900	9 900	52,3	**RNA4904-XL**
	37	30	40 500	51 000	9 200	16 900	9 500	100	**RNA6904-XL**
	38	20	31 000	33 500	5 900	16 600	9 700	68,1	**NKS25-XL**
26	34	16	17 300	23 600	4 450	17 200	10 300	34	**NK26/16-XL**
	34	20	22 000	32 000	5 700	17 200	10 100	42	**NK26/20-XL**
28	37	20	29 000	41 500	7 500	15 800	8 800	58	**NK28/20-D-XL**
	37	20	24 800	34 000	6 000	15 800	9 300	52,2	**NK28/20-XL**
	37	30	37 000	57 000	10 700	15 800	9 000	82	**NK28/30-XL**
	39	17	26 000	29 500	5 400	15 300	8 600	50,2	**RNA49/22-XL**
	39	30	42 000	55 000	10 000	15 300	8 400	98	**RNA69/22-XL**
	42	20	32 500	36 500	6 500	15 100	8 900	83,6	**NKS28-XL**
29	38	20	27 500	39 000	7 000	15 300	8 700	50	**NK29/20-TV-XL**
	38	30	37 000	57 000	10 700	15 300	8 800	84,3	**NK29/30-XL**

medias *https://www.schaeffler.de/std/1F9A*

[1] For unsealed needle roller bearings, dimensionally matched sealing rings of series G or SD can be used to provide protection against contamination.

Dimensions		Suitable sealing rings[1)]	
F_w	r min.		
20	0,3	**G20×28×4**	**SD20×28×4**
	0,3	**G20×28×4**	**SD20×28×4**
	0,3	**G20×28×4**	**SD20×28×4**
	0,3	**G20×28×4**	**SD20×28×4**
	0,3	**G20×28×4**	**SD20×28×4**
	0,6	–	–
21	0,3	**G21×29×4**	–
	0,3	**G21×29×4**	–
22	0,3	**G22×30×4**	**SD22×30×4**
	0,3	**G22×30×4**	**SD22×30×4**
	0,3	**G22×30×4**	**SD22×30×4**
	0,3	**G22×30×4**	**SD22×30×4**
	0,6	–	–
24	0,3	**G24×32×4**	–
	0,3	**G24×32×4**	–
	0,6	–	–
25	0,3	**G25×33×4**	**SD25×33×4**
	0,3	**G25×33×4**	**SD25×33×4**
	0,3	–	–
	0,3	–	–
	0,6	–	–
26	0,3	**G26×34×4**	**SD26×34×4**
	0,3	**G26×34×4**	**SD26×34×4**
28	0,3	**G28×37×4**	–
	0,3	**G28×37×4**	–
	0,3	**G28×37×4**	–
	0,3	–	–
	0,3	–	–
	0,6	–	–
29	0,3	**G29×38×4**	–
	0,3	**G29×38×4**	–

Needle roller bearings with ribs

Without inner ring
Open

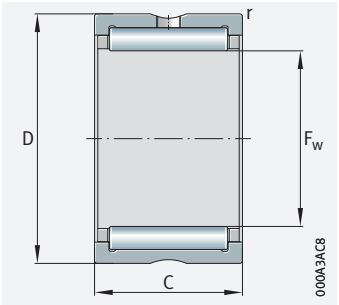

NK, NKS, RNA49, RNA69

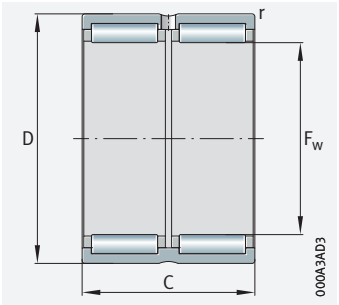

RNA69..-ZW

F_w = 30 – 42 mm

Main dimensions			Basic load ratings		Fatigue limit load	Limiting speed	Speed rating	Mass	Designation
F_w	D	C	dyn. C_r	stat. C_{0r}	C_{ur}	n_G	$n_{\vartheta r}$	m	➤*936*|*1.12* ➤*937*|*1.13* X-life ➤*930*
			N	N	N	min^{-1}	min^{-1}	≈ g	
30	40	20	27 500	35 500	7 400	14 800	8 900	61	**NK30/20-TW-XL**
	40	20	28 000	41 000	7 300	14 800	8 500	61	**NK30/20-TV-XL**
	40	30	42 000	69 000	12 900	14 800	8 200	92,4	**NK30/30-TV-XL**
	42	17	26 500	31 500	5 800	14 400	8 100	61	**RNA4905-XL**
	42	30	44 000	59 000	10 800	14 400	7 900	112	**RNA6905-XL**
	45	22	36 500	40 000	7 000	14 000	8 500	104	**NKS30-XL**
32	42	20	29 500	44 500	8 000	14 000	8 000	64	**NK32/20-TV-XL**
	42	30	39 000	63 000	11 900	14 000	8 200	102	**NK32/30-XL**
	45	17	27 500	33 500	6 200	13 600	7 600	73,2	**RNA49/28-XL**
	45	30	45 500	63 000	11 600	13 600	7 400	135	**RNA69/28-XL**
	47	22	38 000	43 500	7 600	13 200	8 000	110	**NKS32-XL**
35	45	20	31 000	48 500	8 600	12 900	7 400	69,4	**NK35/20-TV-XL**
	45	30	46 000	81 000	15 300	12 900	7 100	106	**NK35/30-TV-XL**
	47	17	28 500	35 500	6 600	12 600	6 900	69,4	**RNA4906-XL**
	47	30	49 000	71 000	13 100	12 600	6 600	126	**RNA6906-XL**
	50	22	39 500	47 000	8 200	12 300	7 400	118	**NKS35-XL**
37	47	20	34 000	56 000	10 000	12 300	6 800	83	**NK37/20-D-XL**
	47	20	28 000	43 500	7 800	12 300	7 400	77	**NK37/20-XL**
	47	30	42 000	73 000	13 700	12 300	7 200	113	**NK37/30-XL**
	52	22	41 500	50 000	8 800	11 700	7 100	123	**NKS37-XL**
38	48	20	29 000	45 000	8 100	12 000	7 200	79,4	**NK38/20-XL**
	48	30	43 000	76 000	14 300	12 000	7 000	116	**NK38/30-XL**
40	50	20	33 500	56 000	10 000	11 400	6 500	78	**NK40/20-TV-XL**
	50	30	44 000	79 000	14 900	11 400	6 700	125	**NK40/30-XL**
	52	20	34 500	47 500	9 100	11 100	6 400	89,1	**RNA49/32-XL**
	52	36	53 000	82 000	15 400	11 100	6 500	162	**RNA69/32-ZW-XL**
	55	22	42 500	54 000	9 400	10 900	6 600	129	**NKS40-XL**
42	52	20	30 000	49 000	8 800	10 900	6 600	85,8	**NK42/20-XL**
	52	30	44 500	82 000	15 500	10 900	6 400	130	**NK42/30-XL**
	55	20	35 500	50 000	9 600	10 700	6 100	107	**RNA4907-XL**
	55	36	54 000	86 000	16 200	10 700	6 200	193	**RNA6907-ZW-XL**

medias *https://www.schaeffler.de/std/1F9A*

[1] For unsealed needle roller bearings, dimensionally matched sealing rings of series G or SD can be used to provide protection against contamination.

Dimensions		Suitable sealing rings[1)]	
F_w	r min.		
30	0,3	**G30×40×4**	**SD30×40×4**
	0,3	**G30×40×4**	**SD30×40×4**
	0,3	**G30×40×4**	**SD30×40×4**
	0,3	–	–
	0,3	–	–
	0,6	–	–
32	0,3	**G32×42×4**	**SD32×42×4**
	0,3	**G32×42×4**	**SD32×42×4**
	0,3	**G32×45×4**	–
	0,3	**G32×45×4**	–
	0,6	–	–
35	0,3	**G35×45×4**	**SD35×45×4**
	0,3	**G35×45×4**	**SD35×45×4**
	0,3	–	–
	0,3	–	–
	0,6	–	–
37	0,3	**G37×47×4**	**SD37×47×4**
	0,3	**G37×47×4**	**SD37×47×4**
	0,3	**G37×47×4**	**SD37×47×4**
	0,6	–	–
38	0,3	**G38×48×4**	**SD38×48×4**
	0,3	**G38×48×4**	**SD38×48×4**
40	0,3	**G40×50×4**	**SD40×50×4**
	0,3	**G40×50×4**	**SD40×50×4**
	0,6	**G40×52×5**	**SD40×52×5**
	0,6	**G40×52×5**	**SD40×52×5**
	0,6	–	–
42	0,3	**G42×52×4**	**SD42×52×4**
	0,3	**G42×52×4**	**SD42×52×4**
	0,6	–	–
	0,6	–	–

Needle roller bearings with ribs

Without inner ring
Open

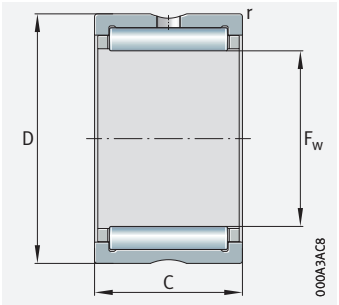

NK, NKS, RNA49

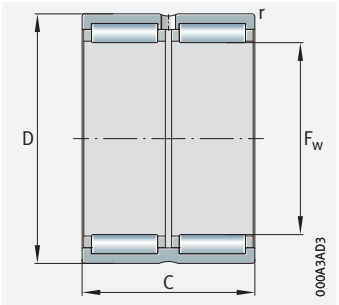

RNA69..-ZW

F_w = 43 – 65 mm

Main dimensions			Basic load ratings		Fatigue limit load	Limiting speed	Speed rating	Mass	Designation
F_w	D	C	dyn. C_r	stat. C_{0r}	C_{ur}	n_G	$n_{\vartheta r}$	m	➤*936*|*1.12* ➤*937*|*1.13* X-life ➤*930*
			N	N	N	min^{-1}	min^{-1}	≈ g	
43	53	20	30 500	51 000	9 100	10 700	6 500	86	**NK43/20-XL**
	53	30	45 500	85 000	16 100	10 700	6 300	133	**NK43/30-XL**
	58	22	44 000	57 000	10 000	10 200	6 200	139	**NKS43-XL**
45	55	20	35 000	62 000	11 000	10 200	5 900	85,3	**NK45/20-TV-XL**
	55	30	52 000	103 000	19 500	10 200	5 700	132	**NK45/30-TV-XL**
	60	22	45 500	60 000	10 600	9 800	6 000	145	**NKS45-XL**
47	57	20	32 500	56 000	10 100	9 800	6 000	94,5	**NK47/20-XL**
	57	30	48 500	94 000	17 800	9 800	5 800	142	**NK47/30-XL**
48	62	22	48 500	67 000	11 700	9 200	5 300	140	**RNA4908-XL**
	62	40	74 000	116 000	19 800	9 200	5 400	256	**RNA6908-ZW-XL**
50	62	25	48 500	87 000	15 000	9 200	5 400	146	**NK50/25-TV-XL**
	62	35	67 000	132 000	24 300	9 200	5 200	207	**NK50/35-TV-XL**
	65	22	48 000	67 000	11 800	8 900	5 500	157	**NKS50-XL**
52	68	22	51 000	73 000	12 900	8 600	4 900	182	**RNA4909-XL**
	68	40	79 000	127 000	21 800	8 600	4 950	338	**RNA6909-ZW-XL**
55	68	25	57 000	111 000	19 700	8 400	4 700	195	**NK55/25-D-XL**
	68	25	45 500	82 000	14 300	8 400	5 200	180	**NK55/25-XL**
	68	35	60 000	118 000	21 600	8 400	5 200	250	**NK55/35-XL**
	72	22	51 000	74 000	13 000	8 200	5 100	221	**NKS55-XL**
58	72	22	53 000	80 000	14 100	7 800	4 350	163	**RNA4910-XL**
	72	40	82 000	139 000	23 800	7 800	4 400	310	**RNA6910-ZW-XL**
60	72	25	53 000	103 000	17 800	7 700	4 600	170	**NK60/25-TV-XL**
	72	35	63 000	130 000	23 900	7 700	4 800	258	**NK60/35-XL**
	80	28	71 000	98 000	17 600	7 400	4 750	335	**NKS60-XL**
63	80	25	65 000	100 000	17 600	7 200	4 150	255	**RNA4911-XL**
	80	45	102 000	176 000	30 500	7 200	4 200	470	**RNA6911-ZW-XL**
65	78	25	50 000	98 000	17 000	7 200	4 500	221	**NK65/25-XL**
	78	35	66 000	142 000	26 000	7 200	4 450	310	**NK65/35-XL**
	85	28	75 000	108 000	19 400	6 900	4 400	356	**NKS65-XL**

medias *https://www.schaeffler.de/std/1F9A*

[1] For unsealed needle roller bearings, dimensionally matched sealing rings of series G or SD can be used to provide protection against contamination.

Dimensions		Suitable sealing rings[1)]	
F_w	r min.		
43	0,3	**G43×53×4**	–
	0,3	**G43×53×4**	–
	0,6	–	–
45	0,3	**G45×55×4**	**SD45×55×4**
	0,3	**G45×55×4**	**SD45×55×4**
	0,6	–	–
47	0,3	–	–
	0,3	–	–
48	0,6	–	–
	0,6	–	–
50	0,6	**G50×62×5**	**SD50×62×5**
	0,6	**G50×62×5**	**SD50×62×5**
	1	–	–
52	0,6	–	–
	0,6	–	–
55	0,6	–	–
	0,6	–	–
	0,6	–	–
	1	–	–
58	0,6	–	–
	0,6	–	–
60	0,6	–	–
	0,6	–	–
	1,1	–	–
63	1	–	–
	1	–	–
65	0,6	–	–
	0,6	–	–
	1,1	–	–

Needle roller bearings with ribs

Without inner ring
Open

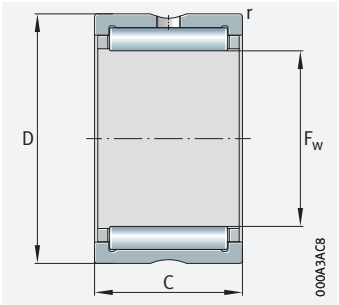

NK, NKS, RNA48, RNA49

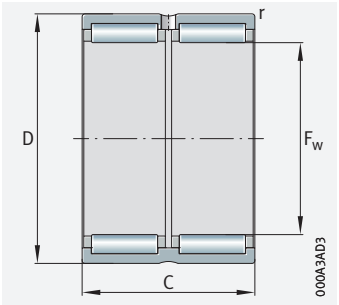

RNA69..-ZW

F_w = 68 – 240 mm

Main dimensions			Basic load ratings		Fatigue limit load	Limiting speed	Speed rating	Mass	Designation	Dimensions
F_w	D	C	dyn. C_r	stat. C_{0r}	C_{ur}	n_G	$n_{\vartheta r}$	m	➤*936*|*1.12* ➤*937*|*1.13* X-life ➤*930*	r
			N	N	N	min^{-1}	min^{-1}	≈ g		min.
68	82	25	49 500	89 000	15 500	6 800	4 500	241	**NK68/25-XL**	0,6
	82	35	70 000	139 000	26 000	6 800	4 350	338	**NK68/35-XL**	0,6
	85	25	68 000	108 000	19 100	6 700	3 850	275	**RNA4912-XL**	1
	85	45	106 000	191 000	33 000	6 700	3 850	488	**RNA6912-ZW-XL**	1
70	85	25	50 000	92 000	16 000	6 600	4 450	260	**NK70/25-XL**	0,6
	85	35	71 000	144 000	27 000	6 600	4 300	370	**NK70/35-XL**	0,6
	90	28	77 000	113 000	20 400	6 400	4 200	380	**NKS70-XL**	1,1
72	90	25	69 000	112 000	19 900	6 300	3 650	312	**RNA4913-XL**	1
	90	45	108 000	198 000	34 500	6 300	3 650	580	**RNA6913-ZW-XL**	1
73	90	25	60 000	100 000	17 900	6 300	4 150	302	**NK73/25-XL**	1
	90	35	85 000	156 000	27 500	6 300	4 050	428	**NK73/35-XL**	1
75	92	25	61 000	104 000	18 500	6 100	4 050	315	**NK75/25-XL**	1
	92	35	87 000	162 000	28 500	6 100	3 950	445	**NK75/35-XL**	1
	95	28	81 000	123 000	22 200	6 000	3 950	402	**NKS75-XL**	1,1
80	95	25	63 000	119 000	20 000	5 800	3 750	301	**NK80/25-XL**	1
	95	35	89 000	184 000	33 000	5 800	3 650	425	**NK80/35-XL**	1
	100	30	95 000	156 000	28 000	5 700	3 400	460	**RNA4914-XL**	1
	100	54	145 000	265 000	48 000	5 700	3 450	857	**RNA6914-ZW-XL**	1
85	105	25	78 000	123 000	22 100	5 400	3 550	425	**NK85/25-XL**	1
	105	35	111 000	193 000	35 000	5 400	3 450	600	**NK85/35-XL**	1
	105	30	97 000	162 000	29 000	5 400	3 200	489	**RNA4915-XL**	1
	105	54	147 000	275 000	50 000	5 400	3 250	935	**RNA6915-ZW-XL**	1
90	110	25	81 000	132 000	23 700	5 100	3 400	450	**NK90/25-XL**	1
	110	35	116 000	208 000	38 000	5 100	3 250	630	**NK90/35-XL**	1
	110	30	101 000	174 000	31 000	5 100	3 000	516	**RNA4916-XL**	1
	110	54	153 000	300 000	54 000	5 100	3 050	987	**RNA6916-ZW-XL**	1
95	115	26	83 000	137 000	24 500	4 850	3 300	490	**NK95/26-XL**	1
	115	36	121 000	223 000	40 500	4 850	3 150	680	**NK95/36-XL**	1

medias *https://www.schaeffler.de/std/1F9A*

Main dimensions			Basic load ratings		Fatigue limit load	Limiting speed	Speed rating	Mass	Designation	Dimensions
F_w	D	C	dyn. C_r	stat. C_{0r}	C_{ur}	n_G	$n_{\vartheta r}$	m	➤936|1.12 ➤937|1.13 X-life ➤930	r
			N	N	N	min^{-1}	min^{-1}	≈ g		min.
100	120	26	86 000	146 000	25 500	4 600	3 150	515	**NK100/26-XL**	1
	120	36	125 000	237 000	42 500	4 600	3 000	715	**NK100/36-XL**	1
	120	35	125 000	237 000	42 500	4 600	2 800	657	**RNA4917-XL**	1,1
	120	63	188 000	400 000	72 000	4 600	2 850	1 200	**RNA6917-ZW-XL**	1,1
105	125	26	89 000	155 000	27 000	4 400	3 050	540	**NK105/26-XL**	1
	125	36	129 000	250 000	44 500	4 400	2 850	713	**NK105/36-XL**	1
	125	35	129 000	250 000	44 500	4 400	2 650	745	**RNA4918-XL**	1,1
	125	63	195 000	425 000	76 000	4 400	2 700	1 330	**RNA6918-ZW-XL**	1,1
110	130	30	111 000	210 000	36 000	4 200	2 800	650	**NK110/30-XL**	1,1
	130	40	143 000	290 000	51 000	4 200	2 750	830	**NK110/40-XL**	1,1
	130	35	131 000	260 000	45 000	4 200	2 500	719	**RNA4919-XL**	1,1
	130	63	197 000	440 000	77 000	4 200	2 550	1 460	**RNA6919-ZW-XL**	1,1
115	140	40	144 000	270 000	46 000	4 000	2 650	1 150	**RNA4920-XL**	1,1
120	140	30	106 000	216 000	36 500	3 900	2 340	670	**RNA4822-XL**	1
125	150	40	149 000	290 000	48 000	3 700	2 430	1 240	**RNA4922-XL**	1,1
130	150	30	112 000	239 000	39 500	3 600	2 120	730	**RNA4824-XL**	1
135	165	45	205 000	390 000	65 000	3 400	2 250	1 860	**RNA4924-XL**	1,1
145	165	35	134 000	310 000	49 500	3 250	2 000	990	**RNA4826-XL**	1,1
150	180	50	229 000	470 000	76 000	3 100	2 080	2 210	**RNA4926-XL**	1,5
155	175	35	136 000	325 000	51 000	3 050	1 870	1 050	**RNA4828-XL**	1,1
160	190	50	237 000	500 000	79 000	2 900	1 910	2 350	**RNA4928-XL**	1,5
165	190	40	172 000	400 000	63 000	2 850	1 830	1 600	**RNA4830-XL**	1,1
175	200	40	181 000	435 000	67 000	2 700	1 700	1 700	**RNA4832-XL**	1,1
185	215	45	209 000	510 000	76 000	2 550	1 640	2 540	**RNA4834-XL**	1,1
195	225	45	219 000	550 000	81 000	2 420	1 510	2 680	**RNA4836-XL**	1,1
210	240	50	255 000	690 000	102 000	2 250	1 360	3 210	**RNA4838-XL**	1,5
220	250	50	260 000	720 000	104 000	2 150	1 280	3 350	**RNA4840-XL**	1,5
240	270	50	275 000	790 000	112 000	1 980	1 130	3 620	**RNA4844-XL**	1,5

medias *https://www.schaeffler.de/std/1F9A*

Needle roller bearings with ribs

Without inner ring
Open

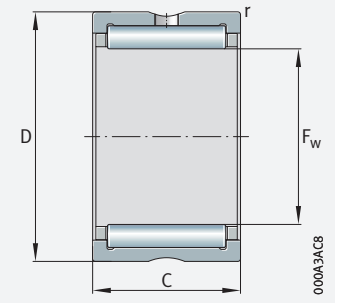

RNA48

F_w = 265 – 415 mm

Main dimensions			Basic load ratings		Fatigue limit load	Limiting speed	Speed rating	Mass	Designation	Dimensions
F_w	D	C	dyn. C_r	stat. C_{0r}	C_{ur}	n_G	$n_{\vartheta r}$	m	➤*936*|*1.12* ➤*937*|*1.13* X-life ➤*930*	r
			N	N	N	min^{-1}	min^{-1}	≈ g		min.
265	300	60	400 000	1 080 000	153 000	1 780	980	5 400	**RNA4848-XL**	2
285	320	60	415 000	1 160 000	161 000	1 660	890	5 800	**RNA4852-XL**	2
305	350	69	510 000	1 300 000	178 000	1 540	850	9 300	**RNA4856-XL**	2
330	380	80	700 000	1 770 000	239 000	1 420	740	12 700	**RNA4860-XL**	2,1
350	400	80	710 000	1 850 000	246 000	1 340	680	13 400	**RNA4864-XL**	2,1
370	420	80	730 000	1 940 000	255 000	1 270	640	14 000	**RNA4868-XL**	2,1
390	440	80	740 000	2 020 000	260 000	1 210	600	14 800	**RNA4872-XL**	2,1
415	480	100	1 130 000	2 900 000	375 000	1 130	520	26 000	**RNA4876-XL**	2,1

medias *https://www.schaeffler.de/std/1F9A*



Needle roller bearings with ribs

With inner ring
Open

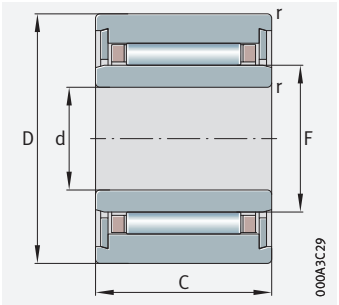

NKI (d ≦ 7 mm)

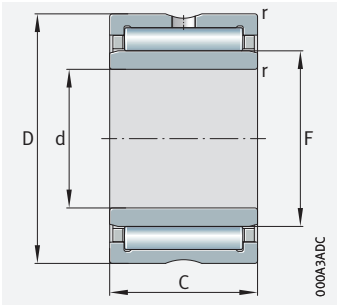

NKI (d ≧ 9 mm), NKIS, NA49, NA69 (d ≦ 30 mm)

d = 5 – 35 mm

Main dimensions			Basic load ratings		Fatigue limit load	Limiting speed	Speed rating	Mass	Designation	Dimensions		
d	D	B	dyn. C_r	stat. C_{0r}	C_{ur}	n_G	$n_{\vartheta r}$	m	➤*936|1.12* ➤*937|1.13* X-life ➤*930*	F	r	s
			N	N	N	min^{-1}	min^{-1}	≈ g			min.	
5	15	12	4 450	4 100	700	32 500	32 500	11,5	**NKI5/12-TV-XL**[1]	8	0,3	1,5
	15	16	5 800	5 800	990	32 500	32 000	15,3	**NKI5/16-TV-XL**[1]	8	0,3	2
6	16	12	5 100	5 000	860	31 000	28 500	13,5	**NKI6/12-TV-XL**[1]	9	0,3	1,5
	16	16	6 600	7 100	1 210	31 000	28 000	17,4	**NKI6/16-TV-XL**[1]	9	0,3	2
7	17	12	5 300	5 500	940	29 500	26 000	13,7	**NKI7/12-TV-XL**[1]	10	0,3	1,5
	17	16	7 000	7 800	1 330	29 500	25 500	18,2	**NKI7/16-TV-XL**[1]	10	0,3	2
9	19	12	7 200	7 100	1 310	26 500	20 200	16,6	**NKI9/12-XL**	12	0,3	1,5
	19	16	10 100	11 000	1 950	26 500	19 500	21,9	**NKI9/16-XL**	12	0,3	2
10	22	16	11 400	11 500	2 140	24 600	16 400	29,4	**NKI10/16-XL**	14	0,3	0,5
	22	20	14 500	15 600	2 750	24 600	16 100	37,1	**NKI10/20-XL**	14	0,3	0,5
	22	13	9 600	9 200	1 660	24 600	16 400	23	**NA4900-XL**	14	0,3	0,5
12	24	16	12 800	13 900	2 600	23 200	14 500	33,3	**NKI12/16-XL**	16	0,3	0,5
	24	20	16 300	18 800	3 350	23 200	14 200	41,9	**NKI12/20-XL**	16	0,3	0,5
	24	13	10 600	10 900	1 970	23 200	14 200	26	**NA4901-XL**	16	0,3	0,5
	24	22	18 100	21 600	3 850	23 200	13 300	46	**NA6901-XL**	16	0,3	1
15	27	16	14 700	17 400	3 250	21 600	12 400	38,8	**NKI15/16-XL**	19	0,3	0,5
	27	20	18 700	23 600	4 200	21 600	12 100	48,7	**NKI15/20-XL**	19	0,3	0,5
	28	13	12 000	13 600	2 470	21 100	11 200	34	**NA4902-XL**	20	0,3	0,5
	28	23	19 500	25 500	4 550	21 100	10 900	63,6	**NA6902-XL**	20	0,3	1
	35	20	27 500	28 000	5 000	18 500	9 400	92	**NKIS15-XL**	22	0,6	0,5
17	29	16	15 200	18 700	3 500	20 600	11 400	42,4	**NKI17/16-XL**	21	0,3	0,5
	29	20	19 300	25 500	4 500	20 600	11 200	53,4	**NKI17/20-XL**	21	0,3	0,5
	30	13	12 400	14 600	2 650	20 000	10 200	37	**NA4903-XL**	22	0,3	0,5
	30	23	21 100	29 000	5 200	20 000	9 800	72	**NA6903-XL**	22	0,3	1
	37	20	29 500	31 000	5 500	17 200	8 800	98	**NKIS17-XL**	24	0,6	0,5
20	32	16	16 900	22 300	4 200	18 500	10 100	49	**NKI20/16-XL**	24	0,3	0,5
	32	20	21 400	30 500	8 100	18 500	9 900	61	**NKI20/20-XL**	24	0,3	0,5
	37	17	23 700	25 500	4 700	16 900	9 400	75,2	**NA4904-XL**	25	0,3	0,8
	37	30	40 500	51 000	9 200	16 900	8 900	141	**NA6904-XL**	25	0,3	1
	42	20	32 500	36 500	6 500	15 100	7 700	129	**NKIS20-XL**	28	0,6	0,5

medias *https://www.schaeffler.de/std/1F9A*

[1] With closing rings, without lubrication hole and groove.

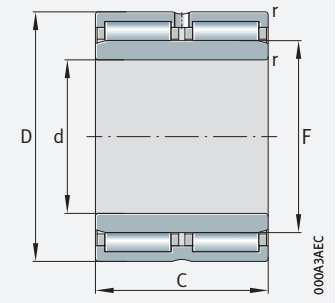

NA69..-ZW

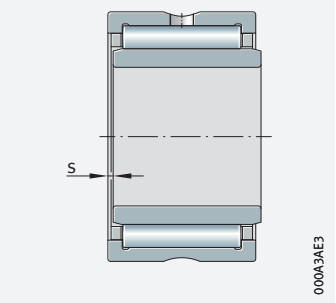

Axial displacement “s”

Main dimensions			Basic load ratings		Fatigue limit load	Limiting speed	Speed rating	Mass	Designation	Dimensions		
d	D	B	dyn. C_r	stat. C_{0r}	C_{ur}	n_G	$n_{\vartheta r}$	m	➤*936* | *1.12* ➤*937* | *1.13* X-life ➤*930*	F	r	s
			N	N	N	min^{-1}	min^{-1}	≈ g			min.	
22	34	16	17 300	23 600	4 450	17 200	9 500	52	**NKI22/16-XL**	26	0,3	0,5
	34	20	22 000	32 000	5 700	17 200	9 300	65,4	**NKI22/20-XL**	26	0,3	0,5
	39	17	26 000	29 500	5 400	15 300	8 100	80	**NA49/22-XL**	28	0,3	0,8
	39	30	42 000	55 000	10 000	15 300	7 900	150	**NA69/22-XL**	28	0,3	0,5
25	38	20	27 500	39 000	7 000	15 300	8 100	75,8	**NKI25/20-TV-XL**	29	0,3	1
	38	30	37 000	57 000	10 700	15 300	8 200	124	**NKI25/30-XL**	29	0,3	1,5
	42	17	26 500	31 500	5 800	14 400	7 700	88	**NA4905-XL**	30	0,3	0,8
	42	30	44 000	59 000	10 800	14 400	7 500	161	**NA6905-XL**	30	0,3	1
	47	22	38 000	43 500	7 600	13 200	7 100	162	**NKIS25-XL**	32	0,6	1
28	42	20	29 500	44 500	8 000	14 000	7 500	92,4	**NKI28/20-TV-XL**	32	0,3	1
	42	30	39 000	63 000	11 900	14 000	7 600	146	**NKI28/30-XL**	32	0,3	1,5
	45	17	27 500	33 500	6 200	13 600	7 400	97,7	**NA49/28-XL**	32	0,3	0,8
	45	30	45 500	63 000	11 600	13 600	7 100	182	**NA69/28-XL**	32	0,3	1
30	45	20	31 000	48 500	8 600	12 900	6 800	108	**NKI30/20-TV-XL**	35	0,3	0,5
	45	30	46 000	81 000	15 300	12 900	6 600	165	**NKI30/30-TV-XL**	35	0,3	1
	47	17	28 500	35 500	6 600	12 600	6 600	101	**NA4906-XL**	35	0,3	0,8
	47	30	49 000	71 000	13 100	12 600	6 300	192	**NA6906-XL**	35	0,3	1
	52	22	41 500	50 000	8 800	11 700	6 400	184	**NKIS30-XL**	37	0,6	1
32	47	20	28 000	43 500	7 800	12 300	6 900	118	**NKI32/20-XL**	37	0,3	0,5
	47	30	42 000	73 000	13 700	12 300	6 600	180	**NKI32/30-XL**	37	0,3	1
	52	20	34 500	47 500	9 100	11 100	6 000	158	**NA49/32-XL**	40	0,6	0,8
	52	36	53 000	82 000	15 400	11 100	6 100	288	**NA69/32-ZW-XL**	40	0,6	0,5
35	50	20	32 500	48 500	10 100	11 400	6 900	122	**NKI35/20-TW-XL**	40	0,3	0,5
	50	20	33 500	56 000	10 000	11 400	6 100	122	**NKI35/20-TV-XL**	40	0,3	0,5
	50	30	44 000	79 000	14 900	11 400	6 200	193	**NKI35/30-XL**	40	0,3	1
	55	20	35 500	50 000	9 600	10 700	5 800	170	**NA4907-XL**	42	0,6	0,8
	55	36	54 000	86 000	16 200	10 700	5 900	310	**NA6907-ZW-XL**	42	0,6	0,5
	58	22	44 000	57 000	10 000	10 200	5 600	220	**NKIS35-XL**	43	0,6	0,5

medias *https://www.schaeffler.de/std/1F9A*

Needle roller bearings with ribs

With inner ring
Open

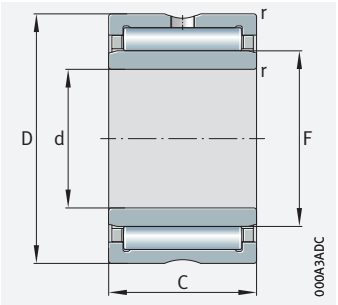

NKI, NKIS, NA49

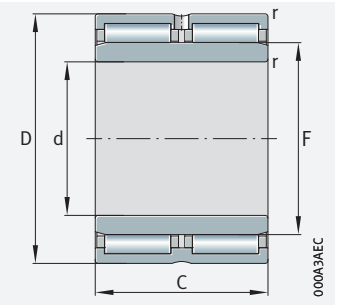

NA69..-ZW

d = 38 – 95 mm

Main dimensions			Basic load ratings		Fatigue limit load	Limiting speed	Speed rating	Mass	Designation	Dimensions		
d	D	B	dyn. C_r	stat. C_{0r}	C_{ur}	n_G	$n_{\vartheta r}$	m	➤*936*|*1.12* ➤*937*|*1.13* X-life ➤*930*	F	r	s
			N	N	N	min^{-1}	min^{-1}	≈ g			min.	
38	53	20	30 500	51 000	9 100	10 700	6 000	136	**NKI38/20-XL**	43	0,3	0,5
	53	30	45 500	85 000	16 100	10 700	5 900	207	**NKI38/30-XL**	43	0,3	1
40	55	20	35 000	62 000	11 000	10 200	5 600	136	**NKI40/20-TV-XL**	45	0,3	0,5
	55	30	54 000	97 000	18 600	10 200	5 900	216	**NKI40/30-TW-XL**	45	0,3	1
	55	30	52 000	103 000	19 500	10 200	5 400	216	**NKI40/30-TV-XL**	45	0,3	1
	62	22	48 500	67 000	11 700	9 200	5 000	230	**NA4908-XL**	48	0,6	1
	62	40	74 000	116 000	19 800	9 200	5 100	430	**NA6908-ZW-XL**	48	0,6	0,5
	65	22	48 000	67 000	11 800	8 900	4 850	281	**NKIS40-XL**	50	1	0,5
42	57	20	32 500	56 000	10 100	9 800	5 600	148	**NKI42/20-XL**	47	0,3	0,5
	57	30	48 500	94 000	17 800	9 800	5 400	222	**NKI42/30-XL**	47	0,3	1
45	62	25	48 500	87 000	15 000	9 200	5 100	217	**NKI45/25-TV-XL**	50	0,6	1,5
	62	35	67 000	132 000	24 300	9 200	4 950	308	**NKI45/35-TV-XL**	50	0,6	2
	68	22	51 000	73 000	12 900	8 600	4 700	271	**NA4909-XL**	52	0,6	1
	68	40	79 000	127 000	21 800	8 600	4 750	495	**NA6909-ZW-XL**	52	0,6	0,5
	72	22	51 000	74 000	13 000	8 200	4 600	336	**NKIS45-XL**	55	1	0,5
50	68	25	45 500	82 000	14 300	8 400	4 950	270	**NKI50/25-XL**	55	0,6	1,5
	68	35	60 000	118 000	21 600	8 400	4 900	379	**NKI50/35-XL**	55	0,6	2
	72	22	53 000	80 000	14 100	7 800	4 150	274	**NA4910-XL**	58	0,6	1
	72	40	82 000	139 000	23 800	7 800	4 200	515	**NA6910-ZW-XL**	58	0,6	0,5
	80	28	71 000	98 000	17 600	7 400	4 250	518	**NKIS50-XL**	60	1,1	2
55	72	25	52 000	92 000	17 400	7 700	4 900	255	**NKI55/25-TW-XL**	60	0,6	1,5
	72	25	53 000	103 000	17 800	7 700	4 400	255	**NKI55/25-TV-XL**	60	0,6	1,5
	72	35	63 000	130 000	23 900	7 700	4 550	379	**NKI55/35-XL**	60	0,6	2
	80	25	65 000	100 000	17 600	7 200	4 000	393	**NA4911-XL**	63	1	1,5
	80	45	102 000	176 000	30 500	7 200	4 000	780	**NA6911-ZW-XL**	63	1	1,5
	85	28	75 000	108 000	19 400	6 900	4 000	558	**NKIS55-XL**	65	1,1	2
60	82	25	49 500	89 000	15 500	6 800	4 200	394	**NKI60/25-XL**	68	0,6	1
	82	35	70 000	139 000	26 000	6 800	4 050	553	**NKI60/35-XL**	68	0,6	1
	85	25	68 000	108 000	19 100	6 700	3 700	426	**NA4912-XL**	68	1	1,5
	85	45	106 000	191 000	33 000	6 700	3 700	808	**NA6912-ZW-XL**	68	1	1,5
	90	28	77 000	113 000	20 400	6 400	3 800	560	**NKIS60-XL**	70	1,1	2

medias *https://www.schaeffler.de/std/1F9A*

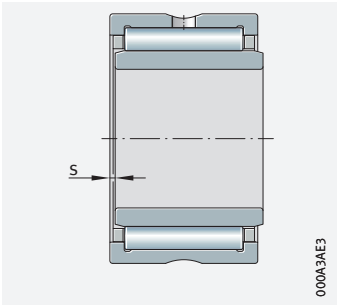

Axial displacement "s"

Main dimensions			Basic load ratings		Fatigue limit load	Limiting speed	Speed rating	Mass	Designation	Dimensions		
d	D	B	dyn. C_r	stat. C_{0r}	C_{ur}	n_G	$n_{\vartheta r}$	m	➤*936* | *1.12* ➤*937* | *1.13* X-life ➤*930*	F	r	s
			N	N	N	min^{-1}	min^{-1}	≈ g			min.	
65	90	25	60 000	100 000	17 900	6 300	3 900	467	**NKI65/25-XL**	73	1	1
	90	35	85 000	156 000	27 500	6 300	3 750	659	**NKI65/35-XL**	73	1	1
	90	25	69 000	112 000	19 900	6 300	3 500	456	**NA4913-XL**	72	1	1,5
	90	45	108 000	198 000	34 500	6 300	3 550	833	**NA6913-ZW-XL**	72	1	1,5
	95	28	81 000	123 000	22 200	6 000	3 600	641	**NKIS65-XL**	75	1,1	2
70	95	25	63 000	119 000	20 000	5 800	3 500	521	**NKI70/25-XL**	80	1	0,8
	95	35	89 000	184 000	33 000	5 800	3 350	737	**NKI70/35-XL**	80	1	0,8
	100	30	95 000	156 000	28 000	5 700	3 250	728	**NA4914-XL**	80	1	1,5
	100	54	145 000	265 000	48 000	5 700	3 300	1 340	**NA6914-ZW-XL**	80	1	1
75	105	25	78 000	123 000	22 100	5 400	3 300	641	**NKI75/25-XL**	85	1	1
	105	35	111 000	193 000	35 000	5 400	3 200	908	**NKI75/35-XL**	85	1	1
	105	30	97 000	162 000	29 000	5 400	3 100	775	**NA4915-XL**	85	1	1,5
	105	54	147 000	275 000	50 000	5 400	3 150	1 450	**NA6915-ZW-XL**	85	1	1
80	110	25	81 000	132 000	23 700	5 100	3 150	677	**NKI80/25-XL**	90	1	1
	110	35	116 000	208 000	38 000	5 100	3 050	959	**NKI80/35-XL**	90	1	1
	110	30	101 000	174 000	31 000	5 100	2 900	878	**NA4916-XL**	90	1	1,5
	110	54	153 000	300 000	54 000	5 100	2 900	1 522	**NA6916-ZW-XL**	90	1	1
85	115	26	83 000	137 000	24 500	4 850	3 100	743	**NKI85/26-XL**	95	1	1,5
	115	36	121 000	223 000	40 500	4 850	2 950	1 040	**NKI85/36-XL**	95	1	1,5
	120	35	125 000	237 000	42 500	4 600	2 650	1 250	**NA4917-XL**	100	1,1	1
	120	63	188 000	400 000	72 000	4 600	2 700	2 200	**NA6917-ZW-XL**	100	1,1	1
90	120	26	86 000	146 000	25 500	4 600	2 950	778	**NKI90/26-XL**	100	1	1,5
	120	36	125 000	237 000	42 500	4 600	2 800	1 090	**NKI90/36-XL**	100	1	1,5
	125	35	129 000	250 000	44 500	4 400	2 500	1 312	**NA4918-XL**	105	1,1	1
	125	63	195 000	425 000	76 000	4 400	2 550	2 310	**NA6918-ZW-XL**	105	1,1	1
95	125	26	89 000	155 000	27 000	4 400	2 850	816	**NKI95/26-XL**	105	1	1,5
	125	36	129 000	250 000	44 500	4 400	2 700	1 145	**NKI95/36-XL**	105	1	1,5
	130	35	131 000	260 000	45 000	4 200	2 400	1 371	**NA4919-XL**	110	1,1	1
	130	63	197 000	440 000	77 000	4 200	2 440	2 500	**NA6919-ZW-XL**	110	1,1	1

medias *https://www.schaeffler.de/std/1F9A*

Needle roller bearings with ribs

With inner ring
Open

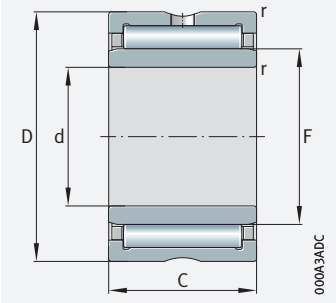

NKI, NA49, NA48

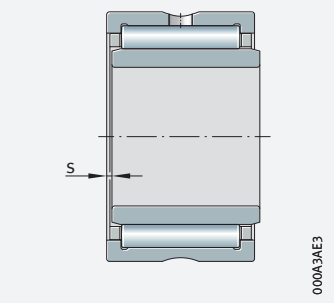

Axial displacement “s”

d = 100 – 380 mm

Main dimensions			Basic load ratings		Fatigue limit load	Limiting speed	Speed rating	Mass	Designation	Dimensions		
d	D	B	dyn. C_r	stat. C_{0r}	C_{ur}	n_G	$n_{\vartheta r}$	m	➤*936*|*1.12* ➤*937*|*1.13* X-life ➤*930*	F	r	s
			N	N	N	min^{-1}	min^{-1}	≈ g			min.	
100	130	30	111 000	210 000	36 000	4 200	2 650	990	**NKI100/30-XL**	110	1,1	1,5
	130	40	143 000	290 000	51 000	4 200	2 600	1 330	**NKI100/40-XL**	110	1,1	2
	140	40	144 000	270 000	46 000	4 000	2 550	1 900	**NA4920-XL**	115	1,1	2
110	150	40	149 000	290 000	48 000	3 700	2 330	2 070	**NA4922-XL**	125	1,1	2
	140	30	106 000	216 000	36 500	3 900	2 270	1 080	**NA4822-XL**	120	1	0,8
120	165	45	205 000	390 000	65 000	3 400	2 160	2 860	**NA4924-XL**	135	1,1	2
	150	30	112 000	239 000	39 500	3 600	2 070	1 170	**NA4824-XL**	130	1	0,8
130	180	50	229 000	470 000	76 000	3 100	2 000	3 900	**NA4926-XL**	150	1,5	1,5
	165	35	134 000	310 000	49 500	3 250	1 930	1 810	**NA4826-XL**	145	1,1	1
140	190	50	237 000	500 000	79 000	2 900	1 860	4 150	**NA4928-XL**	160	1,5	1,5
	175	35	136 000	325 000	51 000	3 050	1 810	1 920	**NA4828-XL**	155	1,1	1
150	190	40	172 000	400 000	63 000	2 850	1 780	2 720	**NA4830-XL**	165	1,1	1,5
160	200	40	181 000	435 000	67 000	2 700	1 650	2 890	**NA4832-XL**	175	1,1	1,5
170	215	45	209 000	510 000	76 000	2 550	1 610	3 960	**NA4834-XL**	185	1,1	1,5
180	225	45	219 000	550 000	81 000	2 420	1 490	4 200	**NA4836-XL**	195	1,1	1,5
190	240	50	255 000	690 000	102 000	2 250	1 330	5 610	**NA4838-XL**	210	1,5	1,5
200	250	50	260 000	720 000	104 000	2 150	1 250	5 840	**NA4840-XL**	220	1,5	1,5
220	270	50	275 000	790 000	112 000	1 980	1 110	6 380	**NA4844-XL**	240	1,5	1,5
240	300	60	400 000	1 080 000	153 000	1 780	960	10 000	**NA4848-XL**	265	2	2
260	320	60	415 000	1 160 000	161 000	1 660	870	10 600	**NA4852-XL**	285	2	2
280	350	69	510 000	1 300 000	178 000	1 540	840	15 300	**NA4856-XL**	305	2	2,5
300	380	80	700 000	1 770 000	239 000	1 420	720	21 800	**NA4860-XL**	330	2,1	2
320	400	80	710 000	1 850 000	246 000	1 340	670	23 000	**NA4864-XL**	350	2,1	2
340	420	80	730 000	1 940 000	255 000	1 270	620	24 200	**NA4868-XL**	370	2,1	2
360	440	80	740 000	2 020 000	260 000	1 210	590	25 600	**NA4872-XL**	390	2,1	2
380	480	100	1 130 000	2 900 000	375 000	1 130	510	42 600	**NA4876-XL**	415	2,1	2

medias *https://www.schaeffler.de/std/1F9A*

Needle roller bearings with ribs

Without inner ring
Sealed

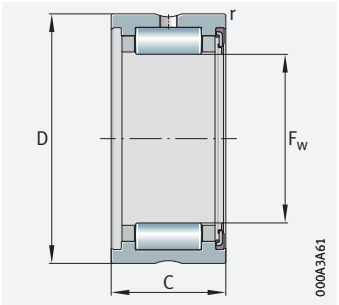

Sealed on one side (-RSR)

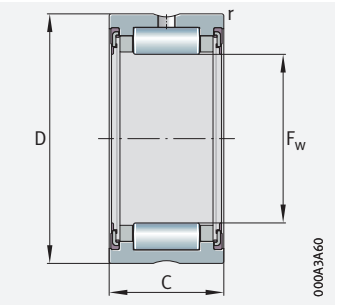

Sealed on both sides (-2RSR)

F_w = 14 – 58 mm

Main dimensions			Basic load ratings		Fatigue limit load	Limiting speed	Mass	Designation		Dimensions
F_w	D	C	dyn. C_r	stat. C_{0r}	C_{ur}	n_G grease	m	➤*936* | *1.12* ➤*937* | *1.13* X-life ➤*930*		r
			N	N	N	min^{-1}	≈ g			min.
14	22	13	7 700	6 900	1 390	14 800	16	**RNA4900-RSR-XL**	**RNA4900-2RSR-XL**	0,3
16	24	13	8 600	8 300	1 660	13 900	18	**RNA4901-RSR-XL**	**RNA4901-2RSR-XL**	0,3
20	28	13	9 700	10 300	2 070	12 600	21,5	**RNA4902-RSR-XL**	**RNA4902-2RSR-XL**	0,3
22	30	13	10 000	11 000	2 220	12 000	23	**RNA4903-RSR-XL**	**RNA4903-2RSR-XL**	0,3
25	37	17	19 500	19 900	3 800	10 100	56	**RNA4904-RSR-XL**	**RNA4904-2RSR-XL**	0,3
30	42	17	21 800	24 200	4 650	8 600	60	**RNA4905-RSR-XL**	**RNA4905-2RSR-XL**	0,3
35	47	17	23 900	28 500	5 500	7 500	69	**RNA4906-RSR-XL**	**RNA4906-2RSR-XL**	0,3
42	55	20	29 500	39 500	7 400	6 400	107	**RNA4907-RSR-XL**	**RNA4907-2RSR-XL**	0,6
48	62	22	41 000	53 000	9 000	5 500	154	**RNA4908-RSR-XL**	**RNA4908-2RSR-XL**	0,6
52	68	22	43 000	59 000	9 900	5 200	157	**RNA4909-RSR-XL**	**RNA4909-2RSR-XL**	0,6
58	72	22	45 000	64 000	10 800	4 650	160	**RNA4910-RSR-XL**	**RNA4910-2RSR-XL**	0,6

medias *https://www.schaeffler.de/std/1F9A*

Needle roller bearings with ribs

With inner ring
Sealed

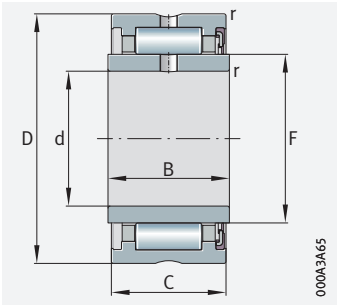

Sealed on one side (-RSR)

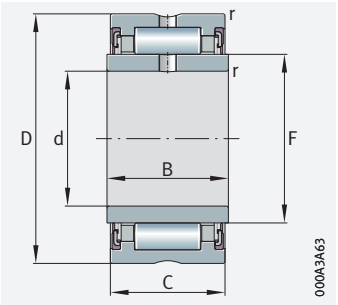

Sealed on both sides (-2RSR)

d = 10 – 50 mm

Main dimensions			Basic load ratings		Fatigue limit load	Limiting speed	Mass	Designation		Dimensions		
d	D	B	dyn. C_r	stat. C_{0r}	C_{ur}	n_G grease	m	➤*936* | *1.12* ➤*937* | *1.13* X-life ➤*930*		F	C	r
			N	N	N	min^{-1}	≈ g					min.
10	22	14	7 700	6 900	1 390	14 800	24,5	**NA4900-RSR-XL**	**NA4900-2RSR-XL**	14	13	0,3
12	24	14	8 600	8 300	1 660	13 900	27,5	**NA4901-RSR-XL**	**NA4901-2RSR-XL**	16	13	0,3
15	28	14	9 700	10 300	2 070	12 600	37	**NA4902-RSR-XL**	**NA4902-2RSR-XL**	20	13	0,3
17	30	14	10 000	11 000	2 220	12 000	40	**NA4903-RSR-XL**	**NA4903-2RSR-XL**	22	13	0,3
20	37	18	19 500	19 900	3 800	10 100	80	**NA4904-RSR-XL**	**NA4904-2RSR-XL**	25	17	0,3
25	42	18	21 800	24 200	4 650	8 600	89,5	**NA4905-RSR-XL**	**NA4905-2RSR-XL**	30	17	0,3
30	47	18	23 900	28 500	5 500	7 500	104	**NA4906-RSR-XL**	**NA4906-2RSR-XL**	35	17	0,3
35	55	21	29 500	39 500	7 400	6 400	175	**NA4907-RSR-XL**	**NA4907-2RSR-XL**	42	20	0,6
40	62	23	41 000	53 000	9 000	5 500	252	**NA4908-RSR-XL**	**NA4908-2RSR-XL**	48	22	0,6
45	68	23	43 000	59 000	9 900	5 200	290	**NA4909-RSR-XL**	**NA4909-2RSR-XL**	52	22	0,6
50	72	23	45 000	64 000	10 800	4 650	295	**NA4910-RSR-XL**	**NA4910-2RSR-XL**	58	22	0,6

medias *https://www.schaeffler.de/std/1F9A*

Needle roller bearings without ribs

Without inner ring
Open

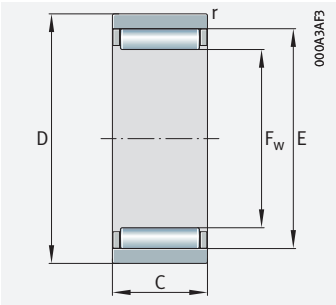

RNAO

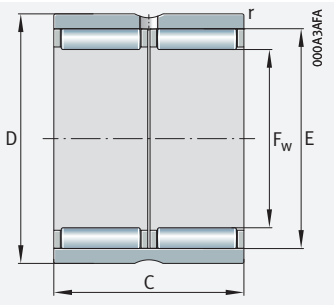

RNAO..-ZW-ASR1

F_w = 5 – 35 mm

Main dimensions			Basic load ratings		Fatigue limit load	Limiting speed	Speed rating	Mass	Designation
F_w	D	C	dyn. C_r	stat. C_{0r}	C_{ur}	n_G	$n_{\vartheta r}$	m	➤*936*|*1.12* ➤*937*|*1.13* X-life ➤*930*
			N	N	N	min^{-1}	min^{-1}	≈ g	
5	10	8	2 650	1 920	300	39 000	53 000	3	**RNAO5×10×8-TV-XL**
6	13	8	2 950	2 280	360	36 500	48 500	6	**RNAO6×13×8-TV-XL**
7	14	8	3 250	2 650	420	34 500	41 500	6	**RNAO7×14×8-TV-XL**
8	15	10	4 450	4 100	700	32 500	35 500	8	**RNAO8×15×10-TV-XL**
10	17	10	5 300	5 500	940	29 500	28 000	10	**RNAO10×17×10-TV-XL**
12	22	12	11 300	9 900	1 770	26 000	19 700	19	**RNAO12×22×12-TV-XL**
15	23	13	9 700	10 900	1 790	24 300	17 900	20	**RNAO15×23×13-XL**
16	24	13	10 100	11 800	1 930	23 600	16 800	21	**RNAO16×24×13-XL**
	28	12	13 000	12 500	2 250	22 900	15 900	32	**RNAO16×28×12-XL**
17	25	13	11 700	14 600	2 280	22 900	15 200	22	**RNAO17×25×13-XL**
18	30	24	24 800	30 000	5 400	21 800	14 000	69	**RNAO18×30×24-ZW-ASR1-XL**
20	28	13	11 100	14 300	2 350	21 300	13 700	25	**RNAO20×28×13-XL**
	28	26	19 000	28 500	4 700	21 300	13 700	50	**RNAO20×28×26-ZW-ASR1-XL**
	32	12	15 100	16 200	2 900	20 900	12 700	38	**RNAO20×32×12-XL**
22	30	13	11 800	15 900	2 600	20 400	12 400	27	**RNAO22×30×13-XL**
	35	16	22 600	25 500	4 250	19 200	11 200	59	**RNAO22×35×16-XL**
25	35	17	16 800	26 000	4 300	18 100	11 000	53	**RNAO25×35×17-XL**
	35	26	21 900	37 000	6 100	18 100	11 200	76	**RNAO25×35×26-ZW-ASR1-XL**
	37	16	23 500	27 500	4 650	17 200	10 000	60	**RNAO25×37×16-XL**
30	40	17	22 100	34 000	5 400	15 100	8 800	60	**RNAO30×40×17-XL**
	42	16	26 000	33 500	5 600	14 600	8 500	59	**RNAO30×42×16-XL**
	42	32	45 000	67 000	11 300	14 600	8 500	137	**RNAO30×42×32-ZW-ASR1-XL**
35	45	13	18 300	28 000	4 550	13 100	7 800	53	**RNAO35×45×13-XL**
	45	17	23 500	38 500	6 200	13 100	7 700	69	**RNAO35×45×17-XL**
	45	26	31 500	56 000	9 100	13 100	7 800	91	**RNAO35×45×26-ZW-ASR1-XL**
	47	16	27 500	37 500	6 300	12 700	7 500	78	**RNAO35×47×16-XL**
	47	18	31 000	43 000	7 500	12 700	7 400	89	**RNAO35×47×18-XL**
	47	32	47 500	75 000	12 600	12 700	7 500	156	**RNAO35×47×32-ZW-ASR1-XL**

medias *https://www.schaeffler.de/std/1F9A*

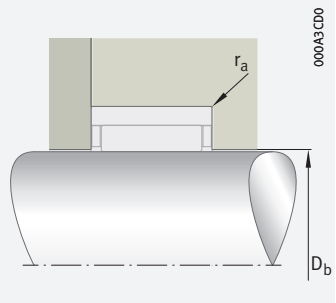

Axial guidance of needle roller and cage assembly in housing

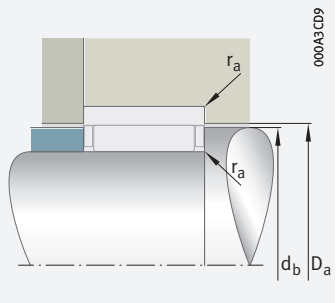

Axial guidance of needle roller and cage assembly on shaft

Dimensions			Mounting dimensions			
F_w	E	r min.	D_b	d_b	D_a	r_a max.
5	8	0,15	5,3	7,7	8,3	0,1
6	9	0,3	6,3	8,7	9,3	0,3
7	10	0,3	7,3	9,7	10,3	0,3
8	11	0,3	8,3	10,7	11,3	0,3
10	13	0,3	10,3	12,7	13,3	0,3
12	18	0,3	12,3	17,6	18,3	0,3
15	19	0,3	15,4	18,6	19,3	0,3
16	20	0,3	16,4	19,6	20,3	0,3
	22	0,3	16,4	21,6	22,3	0,3
17	21	0,3	17,4	20,6	21,3	0,3
18	24	0,3	18,4	23,6	24,5	0,3
20	24	0,3	20,4	23,6	24,3	0,3
	24	0,3	20,4	23,6	24,3	0,3
	26	0,3	20,4	25,6	26,5	0,3
22	26	0,3	22,4	25,6	26,3	0,3
	29	0,3	22,4	28,4	29,5	0,3
25	29	0,3	25,6	28,4	29,5	0,3
	29	0,3	25,6	28,4	29,5	0,3
	32	0,3	25,6	31,4	32,5	0,3
30	35	0,3	30,6	34,4	35,5	0,3
	37	0,3	30,6	36,4	37,5	0,3
	37	0,3	30,6	36,4	37,5	0,3
35	40	0,3	35,6	39,4	40,5	0,3
	40	0,3	35,6	39,4	40,5	0,3
	40	0,3	35,6	39,4	40,5	0,3
	42	0,3	35,6	41,4	42,5	0,3
	42	0,3	35,6	41,4	42,5	0,3
	42	0,3	35,6	41,4	42,5	0,3

Needle roller bearings without ribs

Without inner ring
Open

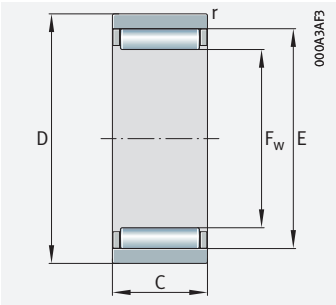

RNAO

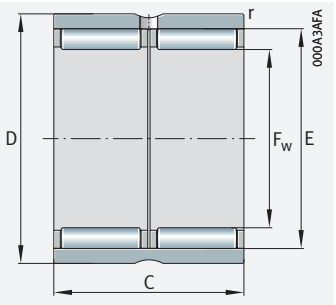

RNAO..-ZW-ASR1

F_w = 40 – 100 mm

Main dimensions			Basic load ratings		Fatigue limit load	Limiting speed	Speed rating	Mass	Designation
F_w	D	C	dyn. C_r	stat. C_{0r}	C_{ur}	n_G	$n_{\vartheta r}$	m	➤*936*|*1.12* ➤*937*|*1.13* X-life➤*930*
			N	N	N	min^{-1}	min^{-1}	≈ g	
40	50	17	24 200	41 500	6 600	11 500	7 000	74	**RNAO40×50×17-XL**
	50	34	41 500	83 000	13 100	11 500	7 000	152	**RNAO40×50×34-ZW-ASR1-XL**
	55	20	37 000	57 000	9 100	11 300	6 600	145	**RNAO40×55×20-XL**
	55	40	70 000	118 000	19 000	11 100	6 500	275	**RNAO40×55×40-ZW-ASR1-XL**
45	55	17	25 500	46 000	7 300	10 300	6 300	83	**RNAO45×55×17-XL**
	62	40	76 000	135 000	21 900	10 000	5 900	377	**RNAO45×62×40-ZW-ASR1-XL**
50	62	20	30 000	60 000	9 700	9 300	5 800	140	**RNAO50×62×20-XL**
	65	20	40 500	62 000	11 000	9 100	5 600	168	**RNAO50×65×20-XL**
	65	40	69 000	124 000	22 100	9 100	5 600	355	**RNAO50×65×40-ZW-ASR1-XL**
55	68	20	32 000	66 000	10 900	8 500	5 400	166	**RNAO55×68×20-XL**
60	78	20	49 500	85 000	13 900	7 700	4 650	255	**RNAO60×78×20-XL**
	78	40	85 000	171 000	28 000	7 700	4 650	435	**RNAO60×78×40-ZW-ASR1-XL**
65	85	30	64 000	123 000	21 500	7 100	4 550	464	**RNAO65×85×30-XL**
70	90	30	68 000	135 000	23 600	6 600	4 250	499	**RNAO70×90×30-XL**
80	100	30	80 000	176 000	31 500	5 800	3 600	580	**RNAO80×100×30-XL**
90	105	26	69 000	150 000	25 500	5 200	3 350	373	**RNAO90×105×26-XL**
	110	30	76 000	172 000	30 000	5 200	3 450	610	**RNAO90×110×30-XL**
100	120	30	80 000	188 000	32 500	4 700	3 150	694	**RNAO100×120×30-XL**

medias *https://www.schaeffler.de/std/1F9A*

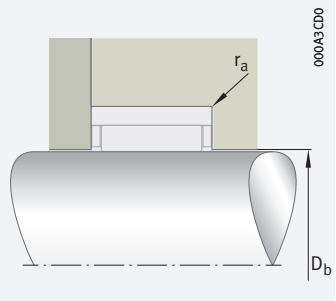

Axial guidance of needle roller and cage assembly in housing

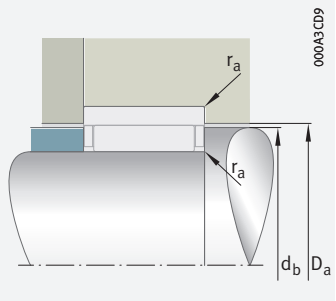

Axial guidance of needle roller and cage assembly on shaft

Dimensions			Mounting dimensions			
F_w	E	r min.	D_b	d_b	D_a	r_a max.
40	45	0,3	40,6	44,4	45,5	0,3
	45	0,3	40,6	44,4	45,5	0,3
	47	0,3	40,6	46,2	47,5	0,3
	48	0,3	40,6	47,2	47,5	0,3
45	50	0,3	45,6	49,2	50,5	0,3
	53	0,3	45,6	52,2	53,5	0,3
50	55	0,3	50,6	54,2	55,8	0,3
	58	0,3	50,6	57,2	58,5	0,3
	58	0,6	50,6	57,2	58,5	0,6
55	60	0,6	55,8	59,4	60,8	0,6
60	68	1	60,8	67,2	68,8	1
	68	1	60,8	67,2	68,8	1
65	73	1	66	72,2	73,8	1
70	78	1	71	77,2	78,8	1
80	88	1	81	87,2	89	1
90	98	1	91	97,2	99	1
	98	1	91	97,2	99	1
100	108	1	101	107,2	109	1

Needle roller bearings without ribs

With inner ring
Open

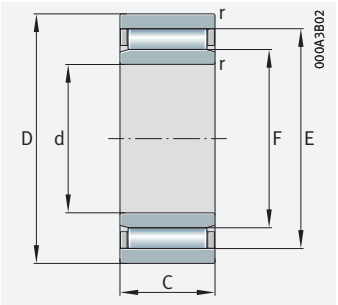

NAO, NAO..-IS1
(with lubrication hole in inner ring)

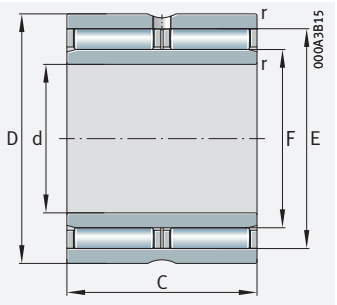

NAO..-ZW-ASR1

d = 6 – 90 mm

Main dimensions			Basic load ratings		Fatigue limit load	Limiting speed	Speed rating	Mass	Designation
d	D	B	dyn. C_r	stat. C_{0r}	C_{ur}	n_G	$n_{\vartheta r}$	m	➤*936* | *1.12* ➤*937* | *1.13* X-life ➤*930*
			N	N	N	min^{-1}	min^{-1}	≈ g	
6	17	10	5 300	5 500	940	29 500	23 800	14	**NAO6×17×10-TV-IS1-XL**
9	22	12	11 300	9 900	1 770	26 000	17 900	23,5	**NAO9×22×12-TV-XL**
12	24	13	10 100	11 800	1 930	23 600	15 000	30	**NAO12×24×13-XL**
	28	12	13 000	12 500	2 250	22 900	14 300	40	**NAO12×28×12-IS1-XL**
15	28	13	11 100	14 300	2 350	21 300	12 100	29	**NAO15×28×13-XL**
	32	12	15 100	16 200	2 900	20 900	11 400	50	**NAO15×32×12-IS1-XL**
17	30	13	11 800	15 900	2 600	20 400	11 100	42	**NAO17×30×13-XL**
	35	16	22 600	25 500	4 250	19 200	10 100	78	**NAO17×35×16-XL**
20	35	17	16 800	26 000	4 300	18 100	10 000	76	**NAO20×35×17-XL**
	37	16	23 500	27 500	4 650	17 200	9 100	82	**NAO20×37×16-XL**
25	40	17	22 100	34 000	5 400	15 100	8 100	88	**NAO25×40×17-XL**
	42	16	26 000	33 500	5 600	14 600	7 800	86	**NAO25×42×16-IS1-XL**
	42	32	45 000	67 000	11 300	14 600	7 800	190	**NAO25×42×32-ZW-ASR1-XL**
30	45	17	23 500	38 500	6 200	13 100	7 100	102	**NAO30×45×17-XL**
	45	26	31 500	56 000	9 100	13 100	7 200	157	**NAO30×45×26-ZW-ASR1-XL**
	47	16	27 500	37 500	6 300	12 700	6 900	109	**NAO30×47×16-XL**
	47	18	31 000	43 000	7 500	12 700	6 900	119	**NAO30×47×18-XL**
35	50	17	24 200	41 500	6 600	11 500	6 500	113	**NAO35×50×17-XL**
	55	20	37 000	57 000	9 100	11 300	6 200	190	**NAO35×55×20-XL**
40	55	17	25 500	46 000	7 300	10 300	5 900	127	**NAO40×55×17-XL**
50	68	20	32 000	66 000	10 900	8 500	5 100	230	**NAO50×68×20-IS1-XL**
70	100	30	80 000	176 000	31 500	5 800	3 350	850	**NAO70×100×30-XL**
80	110	30	76 000	172 000	30 000	5 200	3 200	920	**NAO80×110×30-XL**
90	120	30	80 000	188 000	32 500	4 700	2 950	1 044	**NAO90×120×30-XL**

medias *https://www.schaeffler.de/std/1F9A*

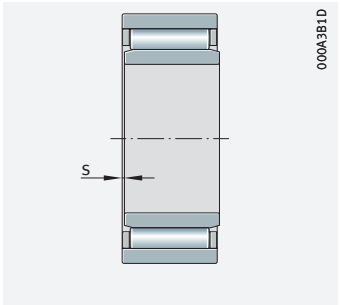

Axial displacement "s"

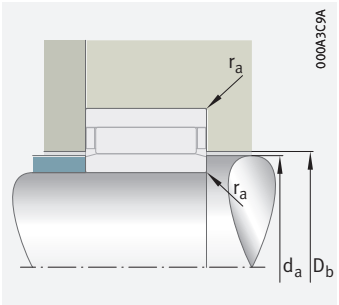

Axial guidance of needle roller and cage assembly in housing

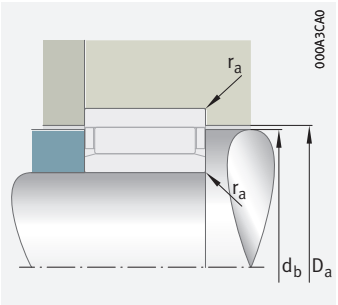

Axial guidance of needle roller and cage assembly on shaft

Dimensions					Mounting dimensions				
d	F	E	r min.	s	d_a	D_b	d_b	D_a	r_a max.
6	10	13	0,3	0,5	9,7	10,3	12,7	13,3	0,3
9	12	18	0,3	0,5	11,7	12,3	17,6	18,3	0,3
12	16	20	0,3	0,5	15,7	16,4	19,6	20,3	0,3
	16	22	0,3	0,5	15,7	16,4	21,6	22,3	0,3
15	20	24	0,3	0,5	19,7	20,4	23,6	24,3	0,3
	20	26	0,3	0,5	19,7	20,4	25,6	26,5	0,3
17	22	26	0,3	0,5	21,5	22,4	25,6	26,3	0,3
	22	29	0,3	0,5	21,5	22,4	28,4	29,5	0,3
20	25	29	0,3	0,5	24,5	25,6	28,4	29,5	0,3
	25	32	0,3	0,5	24,5	25,6	31,4	32,5	0,3
25	30	35	0,3	0,8	29,5	30,6	34,4	35,5	0,3
	30	37	0,3	0,8	29,5	30,6	36,4	37,5	0,3
	30	37	0,3	0,8	29,5	30,6	36,4	37,5	0,3
30	35	40	0,3	0,8	34,5	35,6	39,4	40,5	0,3
	35	40	0,3	0,8	34,5	35,6	39,4	40,5	0,3
	35	42	0,3	0,8	34,5	35,6	41,4	42,5	0,3
	35	42	0,3	0,8	34,5	35,6	41,4	42,5	0,3
35	40	45	0,3	0,8	39,5	40,6	44,4	45,5	0,3
	40	47	0,3	0,8	39,5	40,6	46,2	47,5	0,3
40	45	50	0,3	0,8	44,5	45,6	49,2	50,5	0,3
50	55	60	0,6	1	54,5	55,8	59,2	60,8	0,6
70	80	88	1	1	79,3	81	87,2	89	1
80	90	98	1	1	89,3	91	97,2	99	1
90	100	108	1	1	99,3	101	107,2	109	1

Aligning needle roller bearings

Without inner ring

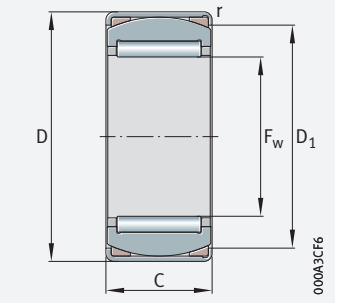

RPNA

F_w = 15 – 45 mm

Main dimensions			Basic load ratings		Fatigue limit load	Limiting speed	Mass	Designation	Dimensions	
F_w	D	C	dyn. C_r	stat. C_{0r}	C_{ur}	n_G	m	➤*936*|*1.12* ➤*937*|*1.13* X-life ➤*930*	D_1	r
		±0,5	N	N	N	min^{-1}	≈ g			min.
15	28	12	7 800	7 900	1 450	24 100	32	**RPNA15/28-XL**	24,5	0,8
18	32	16	14 100	16 200	3 050	22 100	52	**RPNA18/32-XL**	27	0,8
20	35	16	14 600	17 500	3 300	21 100	62	**RPNA20/35-XL**	30,5	0,8
25	42	20	21 300	30 500	5 400	17 800	109	**RPNA25/42-XL**	36,5	0,8
28	44	20	24 800	34 000	6 000	15 800	112	**RPNA28/44-XL**	38,5	0,8
30	47	20	25 500	36 000	6 400	14 800	125	**RPNA30/47-XL**	42	0,8
35	52	20	27 500	41 500	7 400	12 900	131	**RPNA35/52-XL**	47,5	0,8
40	55	20	29 500	47 000	8 400	11 400	141	**RPNA40/55-XL**	50,5	0,8
45	62	20	31 000	53 000	9 400	10 200	176	**RPNA45/62-XL**	58	0,8

medias *https://www.schaeffler.de/std/1F9A*

Aligning needle roller bearings

With inner ring

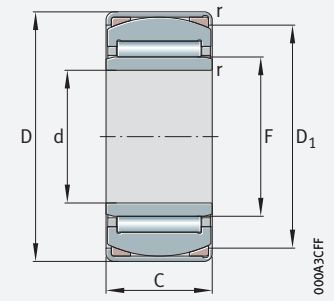

PNA

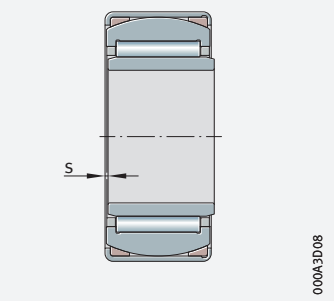

Axial displacement “s”

d = 12 – 40 mm

Main dimensions			Basic load ratings		Fatigue limit load	Limiting speed	Mass	Designation	Dimensions					
d	D	C	dyn. C_r	stat. C_{0r}	C_{ur}	n_G	m	➤*936*|*1.12* ➤*937*|*1.13* X-life ➤*930*	F	B	D_1	r	r_1	s
		±0,5	N	N	N	min^{-1}	≈ g					min.	min.	min.
12	28	12	7 800	7 900	1 450	24 100	37	**PNA12/28-XL**	15	12	24,5	0,8	0,3	0,5
15	32	16	14 100	16 200	3 050	22 100	62	**PNA15/32-XL**	18	16	27	0,8	0,3	0,5
17	35	16	14 600	17 500	3 300	21 100	73	**PNA17/35-XL**	20	16	30,5	0,8	0,3	0,5
20	42	20	21 300	30 500	5 400	17 800	136	**PNA20/42-XL**	25	20	36,5	0,8	0,3	0,5
22	44	20	24 800	34 000	6 000	15 800	145	**PNA22/44-XL**	28	20	38,5	0,8	0,3	0,5
25	47	20	25 500	36 000	6 400	14 800	157	**PNA25/47-XL**	30	20	42	0,8	0,3	0,5
30	52	20	27 500	41 500	7 400	12 900	181	**PNA30/52-XL**	35	20	47,5	0,8	0,3	0,5
35	55	20	29 500	47 000	8 400	11 400	177	**PNA35/55-XL**	40	20	50,5	0,8	0,3	0,5
40	62	20	31 000	53 000	9 400	10 200	227	**PNA40/62-XL**	45	20	58	0,8	0,3	0,5

medias *https://www.schaeffler.de/std/1F9A*

2 Combined needle roller bearings

The bearings:

- can support high radial loads and moderate axial loads by means of a single bearing position ➤*974*|🗀 *1*
- are suitable for applications with a very small radial design envelope, where the raceway on the shaft is designed as a rolling bearing raceway (direct bearing arrangement)
- permit relatively high speeds, if the rolling element set in the axial bearing component is not full complement but guided by a cage
- have a high running accuracy
- permit locating bearing arrangements with only a very small radial design envelope
- result in axially rigid bearing arrangements
- are easy to mount as they are not self-retaining in many cases
- permit technically straightforward, economical and cost-effective designs

For an overview of other product-specific features, see the Matrix for bearing preselection ➤*922*.

🗀 ***1***
Combined needle roller bearing / needle roller bearing: comparison of load direction

F_r = *radial load*
F_a = *axial load*

① *Needle roller/axial deep groove ball bearing NKX*
② *Needle roller bearing NK*

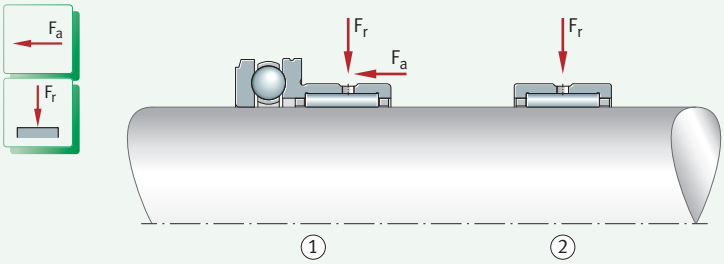

2.1 Bearing design

✎ *Design variants*

The standard product range of combined needle roller bearings comprises:

- needle roller/axial deep groove ball bearings ➤*975*|🗀 *3* to ➤*976*|🗀 *5*
- needle roller/axial cylindrical roller bearings ➤*977*|🗀 *6* and ➤*977*|🗀 *7*
- needle roller/angular contact ball bearings ➤*977*|🗀 *8* and ➤*978*|🗀 *9*

The majority of these needle roller bearings are X-life bearings ➤*978*.

Combined needle roller bearings

The bearings comprise a radial component and an axial component

Combined needle roller bearings comprise a radial needle roller bearing, which is combined with an axial bearing component ➤*975*|*3*, ➤*976*|*5* and ➤*977*|*6*. These bearings can support radial as well as axial loads with just one bearing and permit locating bearing arrangements with only a small radial design envelope ➤*975*|*2* and ➤*978*|*2.2*. They are suitable, for example, where radial and axial loads are present and simple axial contact washers are no longer able to support the axial loads on account of their size, high speeds or inadequate lubrication, and other locating bearings require too much installation space.

2

Combined needle roller bearings, radial and axial dynamic load carrying capacity

C_r = *radial basic dynamic load rating*

C_a = *basic axial dynamic load rating*

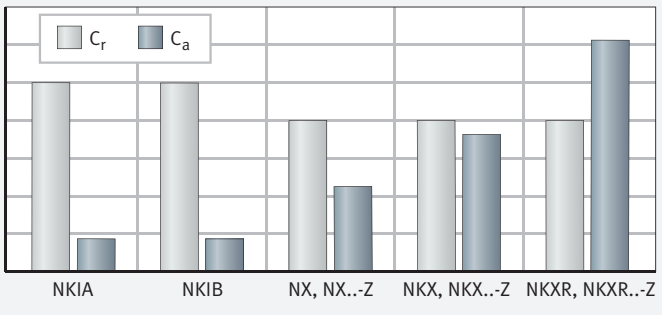

Needle roller/axial deep groove ball bearings

Suitable for compact direct bearing arrangements on the shaft

Needle roller/axial deep groove ball bearings do not have an inner ring and are therefore particularly compact in a radial direction ➤*975*|*3*. However, they require a shaft raceway that is hardened and ground ➤*988*|*2.16*. If the shaft cannot be used as a rolling bearing raceway, inner rings IR can be used instead ➤*976*|*4*. The suitable inner rings are given in the product tables and must be ordered in addition to the bearing ➤*994*|. For lubrication, the outer ring of the radial bearing component has a lubrication groove and lubrication holes.

Type NX, NX..-Z

The rolling element set for the axial bearing component is a full complement ball system

Needle roller/axial deep groove ball bearings NX and NX..-Z have a full complement ball rolling element set and an extremely low radial section height ➤*975*|*3*. Due to the compact radial dimensions, bearing arrangements can be achieved with very small shaft centre distances, such as those that may be present in multi-spindle drilling machines. A sheet steel end cap secured to the radial bearing component grips the shaft locating washing of the axial bearing and holds the axial bearing component together ➤*975*|*3*. As a result, the bearings are self-retaining. The sheet metal caps for bearings NX have lubrication holes for oil lubrication ➤*975*|*3* and ➤*981*|*2.4*.

3

Needle roller/axial deep groove ball bearing NX without inner ring

F_r = *radial load*

F_a = *axial load*

① *NX, full complement axial ball bearing component, with end cap, lubrication holes in the cap*

② *NX..-Z, full complement axial ball bearing component, with end cap, no lubrication holes in the cap*

③ *End cap*

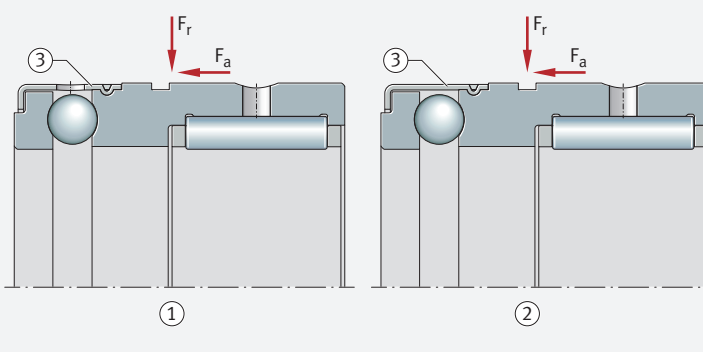

4
Needle roller/axial deep groove ball bearing NX..-Z with inner ring

① *Inner ring IR*

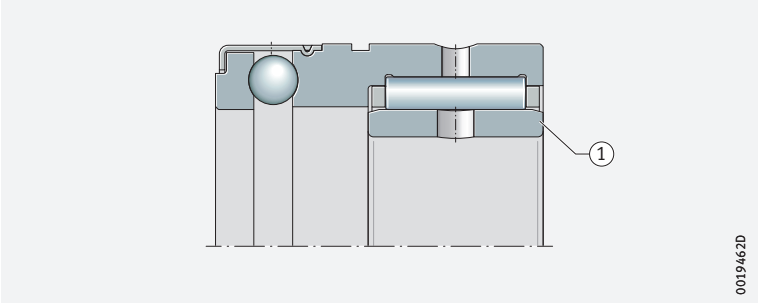

Type NKX, NKX..-Z

The rolling element set for the axial bearing component is guided by a cage

In bearings NKX and NKX..-Z, the rolling element set is not a full complement ball system, as is present in bearings NX, but is retained by a cage ➤*976*| *5*. The ball and cage assembly corresponds to an axial deep groove ball bearing of series 511. As a result of the cage, these bearings are suitable for higher speeds than bearings of the full complement design ➤*994*|.

Type NKX

Bearings NKX are not self-retaining, i. e radial needle roller bearing, axial ball and cage assembly and shaft locating washer can be fitted independently of each other ➤*976*| *5*.

Type NKX..-Z

Type NKX..-Z has a sheet steel end cap, which holds the axial bearing component together, i. e. the bearings are self-retaining.
The cap is designed without lubrication holes and is rigidly connected to the housing locating washer of the radial bearing component ➤*976*| *5*.

5
Needle roller/axial deep groove ball bearings without inner ring

F_r = *radial load*
F_a = *axial load*

① *NKX, axial bearing component with ball and cage assembly, without end cap*
② *NKX..-Z, axial bearing component with ball and cage assembly, with end cap, no lubrication holes in the cap*
③ *End cap*

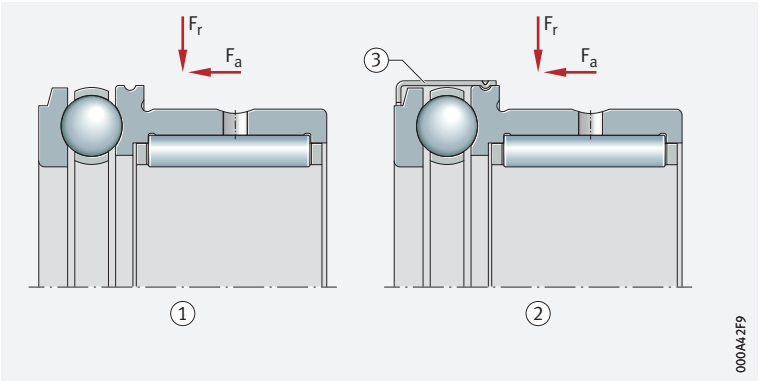

Needle roller/axial cylindrical roller bearings

Type NKXR, NKXR..-Z

The rolling element set for the axial bearing component is guided by a cage

These bearings comprise a radial needle roller bearing and an axial cylindrical roller bearing of series 811 with a plastic cage. They do not have
an inner ring and require a shaft raceway that is hardened and ground ➤*977*| *6* and ➤*988*| *2.16*. If the shaft cannot be used as a rolling bearing raceway, inner rings IR can be used instead ➤*977*| *7*. The suitable inner rings are given in the product tables and must be ordered in addition to the bearing ➤*998*|. For lubrication, the outer ring of the radial bearing component has a lubrication groove and lubrication holes.

Type NKXR

Type NKXR is not self-retaining, i. e. the radial needle roller bearing, axial cylindrical roller bearing and shaft locating washer can be fitted independently of each other ➤*977*| *6*.

Type NKXR..-Z

A sheet steel end cap secured to the radial bearing component grips the shaft locating washing of the axial cylindrical roller bearing and holds the axial bearing component together. As a result, these bearings are self-retaining ➤*977*| *6*.

6
Needle roller/axial cylindrical roller bearings without inner ring

F_r = *radial load*
F_a = *axial load*

① *NKXR, axial bearing component with roller and cage assembly, without end cap*
② *NKXR..-Z, axial bearing component with roller and cage assembly, with end cap, no lubrication holes in the cap*
③ *End cap*

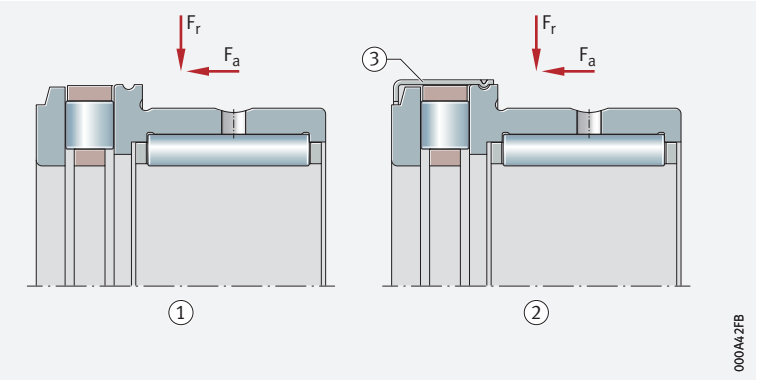

7
Needle roller/axial cylindrical roller bearing NKXR with inner ring

① *Inner ring IR*

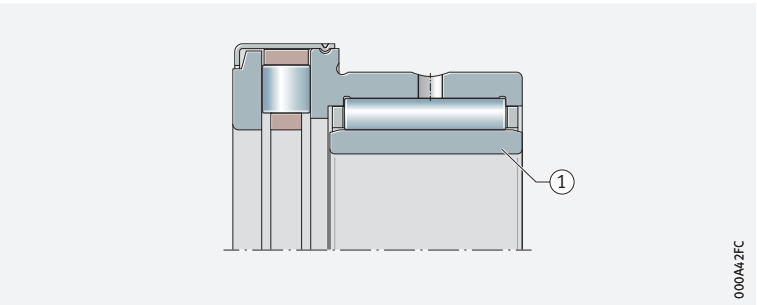

Needle roller/angular contact ball bearings

Type NKIA, NKIB

The rolling element set for the axial bearing component is guided by a cage

Needle roller/angular contact ball bearings comprise a radial needle roller bearing, an angular contact ball bearing as the axial component and an inner ring ➤*977*| *8*and ➤*978*| *9*. In the case of type NKIA the inner ring is of a single-piece design, whereas design NKIB has one narrow and one wide inner ring. The ball cage of the axial bearing component is made from plastic ➤*977*| *8* and ➤*978*| *9* and ➤*983*| *2.9*. The bearings have a low radial section height and are suitable for high speeds ➤*1000*|. As needle roller/angular contact ball bearings are not self-retaining, the inner ring can be mounted independently of the outer ring and needle roller and ball set. During fitting it must, however, be ensured that the bearing rings are not interchanged with rings from other bearings, but are always mounted in the delivered matched pair.

8
Needle roller/angular contact ball bearing NKIA

F_r = *radial load*
F_a = *axial load*

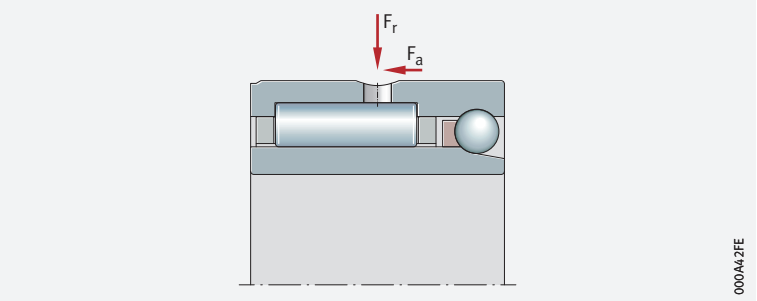

9
Needle roller/angular contact ball bearing NKIB

F_r = *radial load*
F_a = *axial load*

① *Wide inner ring*
② *Narrow inner ring*

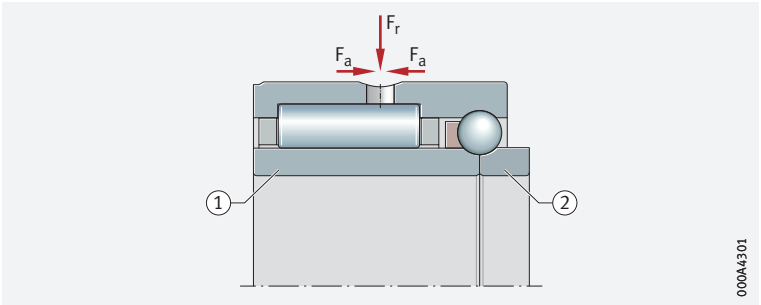

X-life premium quality

The combined needle roller bearings described here are X-life bearings. They are characterised by a very high load carrying capacity and long rating life. This is achieved, for example, through the modified internal construction and optimised contact geometry between the rolling elements
and raceways, as well as through the higher quality of the steel and rolling elements, higher surface quality and appropriate heat treatment.

Increased customer benefits due to X-life

Advantages

The technical enhancements offer a range of advantages, such as:

- a more favourable load distribution in the bearing and thus a higher dynamic load carrying capacity of the bearings
- quieter running
- running with reduced friction and greater energy efficiency
- lower heat generation in the bearing
- higher possible speeds
- lower lubricant consumption and, consequently, longer maintenance intervals
- a measurably longer operating life of the bearings
- high operational security
- compact, environmentally-friendly bearing arrangements

Lower operating costs, higher machine availability

In conclusion, these advantages improve the overall cost-efficiency of the bearing position significantly and thus bring about a sustainable increase in the efficiency of the machine and equipment.

Suffix XL

Combined needle roller bearings in X-life quality include the suffix XL in the designation ➤*982*|*13* to ➤*985*|*15* and ➤*994*|.

X-life indicates a high product performance density and thus a particularly significant benefit to the customer. Further information on X-life ➤*10*.

2.2 Load carrying capacity

Needle roller/axial deep groove ball bearings NX, NX..-Z, NKX, NKX..-Z

Suitable for moderate axial loads

Needle roller/axial deep groove ball bearings support high radial loads and moderate axial loads in one direction ➤*975*|*3* to ➤*976*|*5*. Bearings with a full complement ball set have a higher axial load carrying capacity than bearings with a cage-guided axial component ➤*975*|*2*.

Bearing arrangement for supporting axial loads in both directions

Mounting of two needle roller/axial deep groove ball bearings in a mirror image arrangement

Needle roller/axial deep groove ball bearings can support axial loads in one direction only. If no temperature-induced changes in length occur during operation in an arrangement of short shafts, two bearings can also be used to support axial loads in both directions, which are then mounted in a mirror image arrangement ➤*979*|*10*. The bearing parts should, however, be elastically preloaded in an axial direction, for example by means of disc springs ➤*979*|*10*. The elastic preload ensures that the unloaded axial bearing component runs without slippage ➤*987*|*2.15*. The preload also improves the operating behaviour of axial ball bearings and reduces running noise.

10

Two needle roller/axial deep groove ball bearings NKX mounted in a mirror image arrangement and axially preloaded with disc springs

① *Needle roller/axial deep groove ball bearing NKX*
② *Disc spring set*
③ *Shaft nut for preloading*

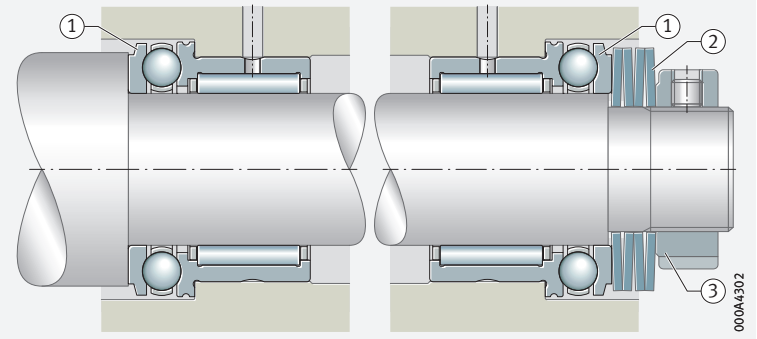

Needle roller/axial cylindrical roller bearings NKXR, NKXR..-Z

Suitable for high axial loads

Needle roller/axial cylindrical roller bearings support high radial loads and also, due to the line contact of the cylindrical rollers, high axial loads in one direction ➤*975*|*2*, ➤*977*|*8* and ➤*978*|*9*.

Bearing arrangement for supporting axial loads in both directions

Mounting of two needle roller/axial cylindrical roller bearings in a mirror image arrangement

Needle roller/axial cylindrical roller bearings can support axial loads in one direction only. If no temperature-induced changes in length occur during operation in an arrangement of short shafts, two bearings can also be used to support axial loads in both directions, which are then mounted in a mirror image arrangement. The bearing parts should, however, be elastically preloaded in an axial direction, for example by means of disc springs ➤*979*|*10*. The elastic preload ensures that the unloaded axial bearing component runs without slippage. The preload also improves the operating behaviour of needle roller/axial cylindrical roller bearings and reduces running noise.

Needle roller/angular contact ball bearings NKIA, NKIB

NKIA for axial forces in one direction, NKIB for alternating axial forces

The radial bearing supports high radial loads, the angular contact ball bearing supports smaller axial forces. NKIA can support axial loads from one direction only ➤*977*|*8*. NKIB has one narrow and one wide inner ring ➤*978*|*9*. At the point where the inner rings join, there is a shoulder on both sides for guidance of the ball and cage assembly. As a result, these bearings are also suitable for supporting axial forces alternating in direction, i.e. as locating bearings, they can guide the shaft axially in both directions. The shaft is guided axially with an axial clearance of 0,08 mm to 0,25 mm.

Replacement of inner rings

In standard bearings of series NKIA and NKIB, the inner rings are matched to the enveloping circle tolerance F6 and can be interchanged with each other (mixed use) within the same accuracy class.

When mounting bearings NKIB, both inner ring parts must be located axially clearance-free against each other. The narrow inner ring has a larger bore diameter. This results in an interference fit if a shaft tolerance k6
is used.

Bearing arrangement for supporting axial loads in both directions with bearings NKIA

Mounting of two needle roller/angular contact ball bearings in a mirror image arrangement

Needle roller/angular contact ball bearings NKIA support axial loads in one direction. In order to support axial loads in both directions, two bearings NKIA can also be used, which are then mounted in a mirror image arrangement ➤980|11.

11
Two needle roller/angular contact ball bearings NKIA mounted in a mirror image arrangement

① *Needle roller/angular contact ball bearing NKIA*
② *Shaft nut for preloading*

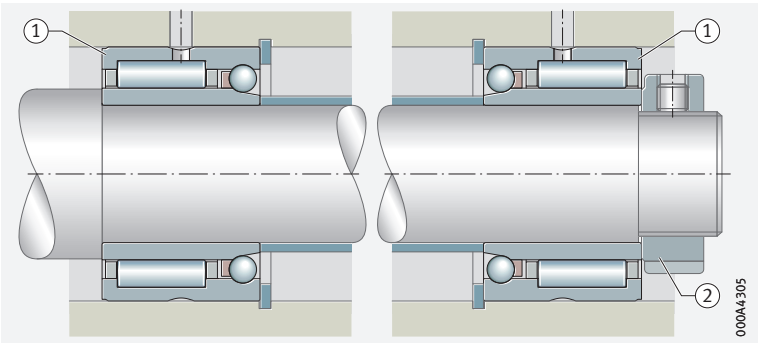

Support of axial forces

Preloading of the axial bearing component

The axial bearing component must be preloaded to 1% of the axial basic static load rating C_{0a} (for example using disc springs). The basic load ratings C_{0a} are stated in the product tables.

Needle roller/axial deep groove ball bearings and needle roller/axial cylindrical roller bearings

Shortening of the retaining rings where there is little distance between the shafts

In order to support axial forces, the bearings must be abutted by means of snap rings on the outer ring or a housing shoulder. If there is little distance between the shaft centres, the snap rings should be shortened ➤980|12. Snap rings WR and SW are available from trade outlets. If the bearings are to support axial forces from alternating directions, two bearings must be fitted opposed to each other. The unloaded bearing must then be axially preloaded, for example by means of disc springs ➤979|10. This allows compensation of thermal expansion.

12
Bearing arrangement with shortened snap rings

① *Snap ring*
② *Shortened area*

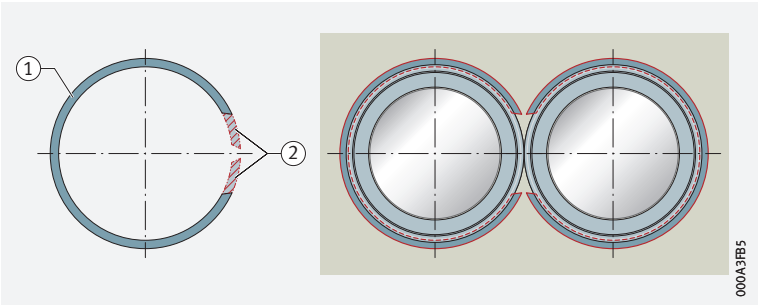

Shaft raceway designed in accordance with DIN 617

If the surface of the shaft raceway is produced to DIN 617, the basic load ratings C_r in the product tables must be reduced by 15%.

2.3 Compensation of angular misalignments

The bearings are not suitable for the compensation of shaft misalignments relative to the housing

Combined needle roller bearings are not suitable for the compensation of angular misalignments. The extent to which a misalignment of the shaft can be tolerated relative to the housing bore is dependent on factors such as the design of the bearing arrangement, the size of the bearing, the operating clearance and the load etc. As a result, no guide value can be specified here for a possible misalignment. If angular misalignments occur, aligning needle roller bearings can, for example, be used in combination with an axial bearing, depending on the application.

In all cases, misalignments cause increased running noise, place increased strain on the cages and have a harmful influence on the operating life of the bearings.

2.4 Lubrication

Greasing of the radial bearing component prior to initial operation

In bearings with grease lubrication, the radial bearing component should be greased before initial operation using a grease of similar quality to that used in the axial bearing component.

Determining the relubrication interval

In order to determine the relubrication interval, values must be calculated separately for the axial and radial bearing components and the lower values should be used.

Compatibility with plastic cages

When using bearings with plastic cages, compatibility between the lubricant and the cage material must be ensured if synthetic oils, lubricating greases with a synthetic oil base or lubricants containing a high proportion of EP additives are used.

Needle roller/axial deep groove ball bearings

Type NX, NKX

NX, NKX for oil lubrication, NX..-Z, NKX..-Z for grease lubrication

NX and NKX are intended for oil lubrication, therefore the bearings are not greased. Oil lubrication is carried out via the lubrication holes in the end cap ➤976|5. If grease lubrication is intended, bearings of type NX..-Z or NXK..-Z should be used. In the case of these bearings, the axial bearing component is greased using a lithium complex soap grease to GA08. The end caps do not have lubrication holes.

Type NKX, NKX..-Z

Type NKX

Type NKX does not have a cap which holds the axial bearing component together ➤976|5. As a result, these bearings are not self-retaining. They should be used with oil lubrication in preference, as the lubricating grease can only be retained with difficulty in the axial bearing component.

Type NKX..-Z

The bearings have an end cap without lubrication holes and are intended for grease lubrication ➤974|2.1 and ➤976|5. The axial bearing component is greased using a lithium complex soap grease to GA08.

Needle roller/axial cylindrical roller bearings

Type NKXR, NKXR..-Z

Type NKXR

As the bearings do not have an end cap, the lubricating grease can only be retained with difficulty in the axial bearing component ➤977|6. They should therefore be lubricated using oil in preference.

Type NKXR..-Z

Bearings of this type have an end cap without lubrication holes and are intended for grease lubrication ➤977|6. The axial bearing component is greased using a lithium complex soap grease to GA08.

Needle roller/angular contact ball bearings

Type NKIA, NKIB

Needle roller/angular contact ball bearings can be lubricated with oil or grease. For lubrication, the outer ring has a lubrication groove and a lubrication hole ➤977|8 and ➤978|9. If grease lubrication is used, the radial and axial bearing components must be lubricated with the same grease prior to mounting the bearings.

2.5 Sealing

Provide seals in the adjacent construction

Combined needle roller bearings are not sealed. In the case of unsealed bearings, sealing of the bearing position must be carried out in the adjacent construction. This must reliably prevent:

- moisture and contaminants from entering the bearing
- the egress of lubricant from the bearing

13
Sealing of the bearing position in the adjacent construction – example

① *Needle roller/axial deep groove ball bearing NX..-Z*
② *Sealing of the bearing with rotary shaft seal G*

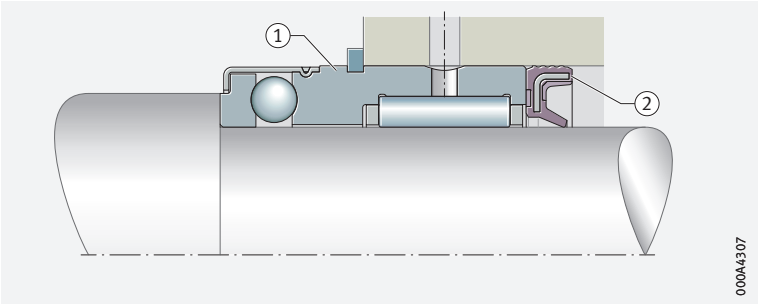

Bearings with end cap

End caps without lubrication holes are suitable for grease lubrication

Bearings of design Z have an end cap, which grips the axial bearing component ➤*974*|*2.1* and ➤*975*|*3*, ➤*976*|*5* and ➤*977*|*6*. End caps without lubrication holes form a gap seal and retain the lubricating grease in the axial bearing component (applies to types NX..-Z, NKX..-Z, NKXR..-Z).

2.6 Speeds

Speeds in the product tables

The product tables generally give two speeds for the bearings:

- the kinematic limiting speed n_G
- the thermal speed rating $n_{\vartheta r}$

Limiting speeds

The limiting speed n_G is the kinematically permissible speed of the bearing. Even under favourable mounting and operating conditions, this value should not be exceeded without prior consultation with Schaeffler ➤*64*.

The values in the product tables are valid for oil lubrication.

Values for grease lubrication

For grease lubrication, 60% of the value stated in the product tables is permissible in each case.

Reference speeds

$n_{\vartheta r}$ is used to calculate n_ϑ

The thermal speed rating $n_{\vartheta r}$ is not an application-oriented speed limit, but is a calculated ancillary value for determining the thermally safe operating speed n_ϑ ➤*64*.

The thermally safe speed rating $n_{\vartheta r}$ for NKXR, NKXR..-Z, NKIA and NKIB is given in the product tables. The speed rating $n_{\vartheta r}$ to DIN ISO 15312:2004 is not defined for bearings NX and NKX and therefore only the limiting speed n_G is given.

In order to calculate the thermally safe operating speed n_ϑ, NKXR(..-Z) must be regarded as axial bearings and NKIA, NKIB as radial bearings.

2.7 Noise

Schaeffler Noise Index

The Schaeffler Noise Index (SGI) is not yet available for this bearing type ➤*69*. The data for these bearing series will be introduced and updated in stages.

Further information:

- ***medias*** *https://medias.schaeffler.com*

2.8 Temperature range

✎ *Limiting values*

The operating temperature of the bearings is limited by:

- the dimensional stability of the bearing rings and rolling elements
- the cage
- the lubricant

Possible operating temperatures of combined needler roller bearings ➤*426*|▦*3*.

▦ **1** *Permissible temperature ranges*

Operating temperature	Combined needle roller bearings Full complement ball type bearings, bearings with a sheet steel cage or polyamide cage PA66
	–30 °C to +120 °C

In the event of anticipated temperatures which lie outside the stated values, please contact Schaeffler.

2.9 Cages

✎ *Sheet steel or plastic cages are used as standard*

The cages of radial bearings are made from sheet steel or plastic and are closed on both sides ➤*994*|▦. Bearings with a polyamide cage PA66 have the suffix TV. The cages for the axial bearing component are closed on both sides or open on one side. Sheet steel or glass fibre reinforced polyamide PA66 are used here as standard, depending on the bearing type.

For high continuous temperatures and applications with difficult operating conditions, bearings with sheet steel cages should be used. If there is any uncertainty regarding cage suitability, please consult Schaeffler.

2.10 Internal clearance

Radial internal clearance of bearings with inner ring

✎ *The standard is CN*

As standard, combined needler roller bearings with inner ring have the radial internal clearance CN (normal) ➤*984*|▦*2*. CN is not stated in the designation.

The values for radial internal clearance in bearings with an inner ring correspond to DIN 620-4:2004 (ISO 5753-1:2009) ➤*984*|▦*2*. These are valid for bearings which are free from load and measurement forces (without elastic deformation).

For delivery options of bearings with a radial internal clearance value other than CN (for example C2, C3, C4) please consult Schaeffler.

Bearings with inner ring

2
Radial internal clearance of combined needle roller bearings with inner ring

Nominal bore diameter d mm		Radial internal clearance CN µm	
over	incl.	min.	max.
–	24	20	45
24	30	20	45
30	40	25	50
40	50	30	60
50	65	40	70
65	80	40	75
80	100	50	85

Enveloping circle diameter F_w for bearings without an inner ring

For bearings without an inner ring, the enveloping circle diameter F_w is used

In the case of bearings without inner ring, the dimension for the enveloping circle diameter F_w is used instead of the radial internal clearance. The enveloping circle is the inner inscribed circle of the needle rollers in clearance-free contact with the outer raceway. For bearings before fitting, the enveloping circle F_w is in the tolerance class F6.

Deviations ➤*984*|*3*.

3
Deviations for the enveloping circle diameter

Enveloping circle diameter F_w mm		Tolerance class F6 Tolerance for enveloping circle diameter F_w	
		upper deviation	lower deviation
over	incl.	µm	µm
3	6	+18	+10
6	10	+22	+13
10	18	+27	+16
18	30	+33	+20
30	50	+41	+25
50	80	+49	+30
80	120	+58	+36
120	180	+68	+43
180	250	+79	+50
250	315	+88	+56
315	400	+98	+62
400	500	+108	+68

2.11 Dimensions, tolerances

Dimension standards

The main dimensions of combined needle roller bearings correspond to ISO 15:2017 (DIN 616:2000 and DIN 5429-1:2005).
This excludes needle roller/axial deep groove ball bearings of the types NX and NX..-Z, which are not standardised.

Chamfer dimensions

The limiting dimensions for chamfer dimensions correspond to DIN 620-6:2004. Overview and limiting values ➤*137*|*7.11*.
Nominal value of chamfer dimension ➤*994*|.

Tolerances

The dimensional, geometrical and running tolerances of the bearings correspond to tolerance class Normal:

- Radial bearing component in accordance with ISO 492:2014 and DIN 620-2:1988. Tolerance values in accordance with ISO 492 ➤124|▦8
- Axial bearing component in accordance with ISO 199:2014 and DIN 620-3:1982. Tolerance values in accordance with ISO 199 ➤135|▦25

This excludes:

- NKIB, in this instance the bore d_1 of the narrow inner ring and the width (–0,3 mm) over both inner rings
- NKX and NKXR, in this instance the diameters D_1, D_2

2.12 Suffixes

Suffixes describe the design and features of a bearing in more detail.

▦4 *Suffixes and corresponding descriptions*

Suffix	Description of suffix	
TV	Bearing with radial cage made from glass fibre reinforced polyamide 66	Standard
XL	X-life bearing	
Z	Bearing with end cap, axial bearing component greased with lithium complex soap grease to GA08	

2.13 Structure of bearing designation

With ***medias*** interchange, equivalent Schaeffler bearing designations can be determined for bearing designations from other rolling bearing manufacturers *https://www.schaeffler.de/std/1B69*.

✎ *Examples of composition of bearing designation*

The designation of bearings follows a set model. Examples ➤985|⧉14 to ➤986|⧉16. The composition of designations is subject in part to DIN 623-1 ➤102|⧉10.

⧉14 *Needle roller/axial deep groove ball bearing without inner ring, for grease lubrication: designation structure*

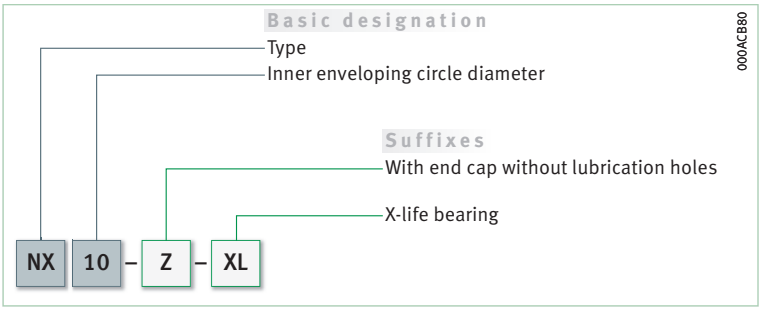

⧉15 *Needler roller/axial cylindrical roller bearing, with end cap, with recommended inner ring: designation structure*

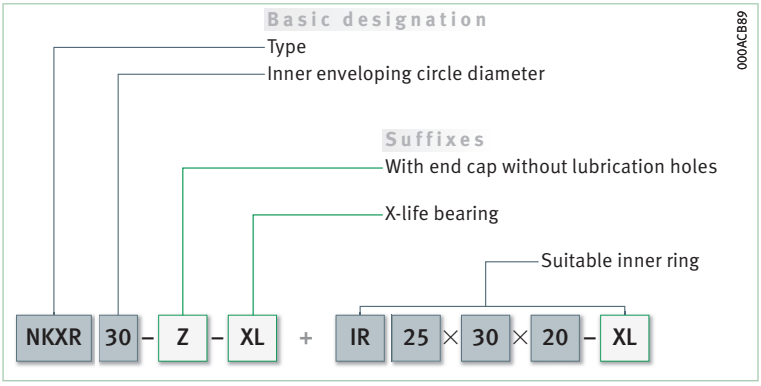

16
Needle roller/angular contact ball bearing, double direction, with standard inner ring: designation structure

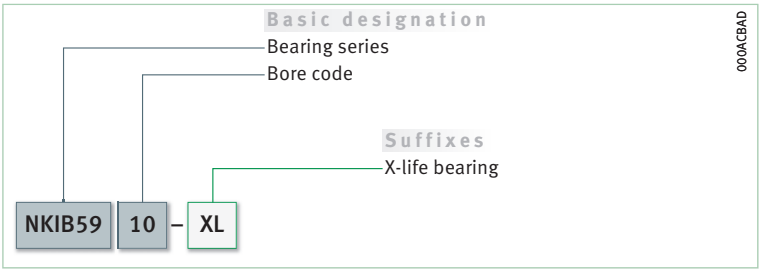

2.14 Dimensioning

Equivalent dynamic bearing load

Separate calculation of the rating life for radial and axial bearing components

In the case of combined needle roller bearings, the rating life of the radial bearing and axial bearing component must always be calculated separately ➤*986*| *1* and ➤*986*| *2*. The lower value then applies in each case to the bearing position.

$P = F_r$ and F_a respectively under purely radial load and purely axial load of constant magnitude and direction

The basic rating life equation $L = (C/P)^p$ used in the dimensioning of bearings under dynamic load assumes a concentrically acting load of constant magnitude and direction. In the case of radial bearings, this is a purely radial load F_r, while in the case of axial bearings it is a purely axial load F_a. In order to calculate the fatigue rating life for combined needle roller bearings, the bearing load F_r or F_a ($P_r = F_r$ or $P_a = F_a$) is therefore used in the rating life equation for P ➤*986*| *1* and ➤*986*| *2*.

Radial bearings

The radial component of the combined needle roller bearing may only be subjected to radial load. For the calculation of P_r ➤*986*| *1*.

1
Equivalent dynamic load

$$P_r = F_r$$

Legend

P_r	N	Equivalent dynamic bearing load for the radial bearing
F_r	N	Radial load.

Axial bearing component

The axial bearing can only be subjected to axial load. For the calculation of P_a under a concentrically acting axial load ➤*986*| *2*.
For needle roller/angular contact ball bearings, the axial load F_a must not exceed $0{,}25 \cdot F_r$.

2
Equivalent dynamic load

$$P_a = F_a$$

Legend

P_a	N	Equivalent dynamic bearing load for the axial bearing component
F_a	N	Axial load.

Equivalent static bearing load

The equivalent static bearing load must be calculated for both the radial bearing and the axial bearing component ➤987| 3 and ➤987| 4.

3 *Equivalent static load*

$$P_{0r} = F_{0r}$$

4 *Equivalent static load*

$$P_{0a} = F_{0a}$$

Legend

P_{0r}	N	Equivalent static bearing load for the radial bearing
F_{0r}	N	Largest radial load present (maximum load)
P_{0a}	N	Equivalent static bearing load for the axial bearing component
F_{0a}	N	Largest axial load present (maximum load).

Static load safety factor

✎ S_{0a} for needle roller/ angular contact ball bearings

In addition to the basic rating life L (L_{10h}), it is also always necessary to check the static load safety factor S_0 ➤987| 5. The calculation must be carried out for both the radial bearing (S_{0r}) and the axial bearing component (S_{0a}). The axial static load safety factor S_{0a} must be $> 1{,}5$.

5 *Static load safety factor*

$$S_0 = \frac{C_0}{P_0}$$

Legend

S_{0r}, S_{0a}	–	Static load safety factor
C_{0r}, C_{0a}	N	Basic static load rating
P_{0r}, P_{0a}	N	Equivalent static bearing load.

2.15 Minimum load

Minimum radial load

✎ In order to prevent damage due to slippage, a minimum radial load of $P > C_{0r}/60$ is required

In order that no slippage occurs between the contact partners, the radial bearing component must be constantly subjected to a sufficiently high load. For continuous operation, experience shows that a minimum radial load of the order of $P > C_{0r}/60$ is necessary. In most cases, however, the radial load is already higher than the requisite minimum load due to the weight of the supported parts and the external forces.

If the minimum radial load is lower than indicated above, please consult Schaeffler.

Minimum axial load

The axial component of the bearing arrangement must be preloaded to 1% of the axial basic static load rating C_{0a}. Basic load ratings C_{0a} ➤994|.

2.16 Design of bearing arrangements

Support bearing rings over their entire circumference and width

In order to allow full utilisation of the load carrying capacity of the bearings and achieve the requisite rating life, the bearing rings must be rigidly and uniformly supported by means of contact surfaces over their entire circumference and over the entire width of the raceway. Support can be provided by means of a cylindrical seating surface. The seating and contact surfaces should not be interrupted by grooves, holes or other recesses. The accuracy of mating parts must meet specific requirements ➤*989*| 5 to ➤*989*| 8.

Radial location

For secure radial location, tight fits are necessary

In addition to supporting the rings adequately, the bearings must also be securely located in a radial direction, to prevent creep of the bearing rings on the mating parts under load. This is generally achieved by means of tight fits between the bearing rings and the mating parts. If the rings are not secured adequately or correctly, this can cause severe damage to the bearings and adjacent machine parts. Influencing factors, such as the conditions of rotation, magnitude of the load, internal clearance, temperature conditions, design of the mating parts and the mounting and dismounting options must be taken into consideration in the selection of fits.

The following information provided in Technical principles must be taken into consideration in the design of bearing arrangements:

- criteria for selection of fits ➤*146*
- conditions of rotation ➤*147*
- tolerance classes for cylindrical shaft seats (radial bearings) ➤*149*| 2
- shaft fits ➤*152*| 6
- tolerance classes for bearing seats in housings (radial bearings) ➤*150*| 4
- housing fits ➤*160*| 7

Axial location

The bearings must also be securely located in an axial direction

As a tight fit alone is not normally sufficient to also locate the bearing rings securely on the shaft and in the housing bore in an axial direction, this must usually be achieved by means of an additional axial location or retention method. The axial location of the bearing rings must be matched to the type of bearing arrangement. Shaft and housing shoulders, retaining rings etc., are fundamentally suitable ➤*979*| 10, ➤*980*| 11 and ➤*990*| 18. For locating bearings and for bearings with a split inner ring (type NKIB), axial abutment of the bearing rings on both sides is particularly important.

Types NX and NX..-Z

Axial location by snap ring

With types NX and NX..-Z, the retaining ring is inserted in the annular slot in the bearing outer ring ➤*988*| 17. Snap rings which are inserted in the slot are a particularly compact and cost-effective way of locating the bearings axially in the housing. Suitable snap rings ➤*994*|. The snap rings must be ordered in addition to the bearing.

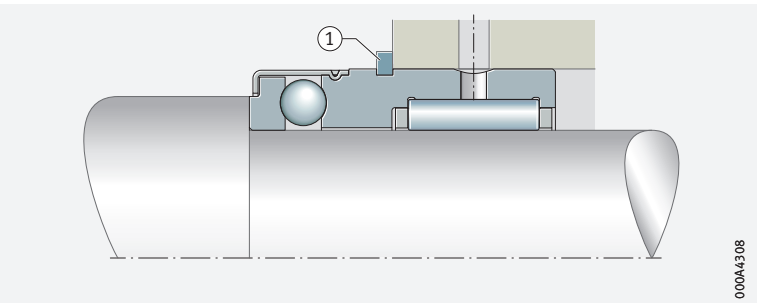

17
Combined needle roller bearing NX with a retaining ring located axially in the housing

① *Annular slot with retaining ring*

Type NKX, NKX..-Z

The axial location of these bearings in one direction can take place by means of the needle roller bearing with integrated housing locating washer.

Dimensional, geometrical and running accuracy of cylindrical bearing seats (bearings with inner ring)

Tolerance classes and surface designs for the shaft and the housing bore ➤*989*| ▦ *5* and ➤*989*| ▦ *6*.

▦ *5*
Tolerance classes and surface design for the shaft – bearings with inner ring

Series	Shaft tolerance	Roundness tolerance max.	Parallelism tolerance max.
NKIA, NKIB	k6 Ⓔ	IT4/2	IT4
NX, NKX, NKXR			

▦ *6*
Tolerance classes and surface design for the housing bore

Series	Bore tolerance to ISO 286-2	Roundness tolerance max.	Parallelism tolerance max.
NKIA, NKIB	M6 Ⓔ	IT5/2	IT4
NX, NKX, NKXR	K6 Ⓔ, M6 Ⓔ (for rigid bearing arrangements)		

▦ *7*
Numerical values for ISO standard tolerances (IT grades) to ISO 286-1:2010

IT grade	Nominal dimension in mm				
	over **6**	**10**	**18**	**30**	**50**
	incl. **10**	**18**	**30**	**50**	**80**
	Values in µm				
IT4	4	5	6	7	8
IT5	6	8	9	11	13
IT6	9	11	13	16	19
IT7	15	18	21	25	30

Roughness of cylindrical bearing seating surfaces

✎ *Ra must not be too high*

The roughness of the bearing seats must be matched to the tolerance class of the bearings. The mean roughness value Ra must not be too high, in order to maintain the interference loss within limits. The shafts must be ground, while the bores must be precision turned. Guide values as a function of the IT grade of bearing seating surfaces ➤*989*| ▦ *8*.

▦ *8*
Roughness values for cylindrical bearing seating surfaces – guide values

Nominal diameter of the bearing seat d (D) mm		Recommended mean roughness value for ground bearing seats Ramax µm			
		Diameter tolerance (IT grade)			
over	incl.	IT7	IT6	IT5	IT4
–	80	1,6	0,8	0,4	0,2

Mounting dimensions

The contact surfaces for the rings must be of sufficient height

The mounting dimensions of the shaft and housing shoulders, spacer rings and retaining rings etc., must ensure that the contact surfaces for the bearing rings are of sufficient height. Proven mounting dimensions for the radii and diameters of abutment shoulders are given in the product tables ➤994. These dimensions are limiting dimensions (maximum or minimum dimensions); the actual values should not be higher or lower than specified.

The transition from the bearing seat to the abutment shoulder must be designed with rounding to DIN 5418 or an undercut to DIN 509. The maximum chamfer dimensions for the inner rings in accordance with DIN 620-6 must be taken into consideration.

For NKX and NKXR, the axial bearing component seat must be free in the housing

In order to avoid double fits, the diameter of the contact surface for the housing locating washer in the adjacent construction must be at least +0,5 mm larger than dimension D_1 and D_2 of the bearing washer in bearings NKX and NKXR ➤990. Values for diameters D_1 and D_2 ➤994.

18
Free housing locating washer in the adjacent construction for NKX and NKXR

D_1 = *dimension of housing locating washer without end cap*
D_2 = *dimension of housing locating washer with end cap*

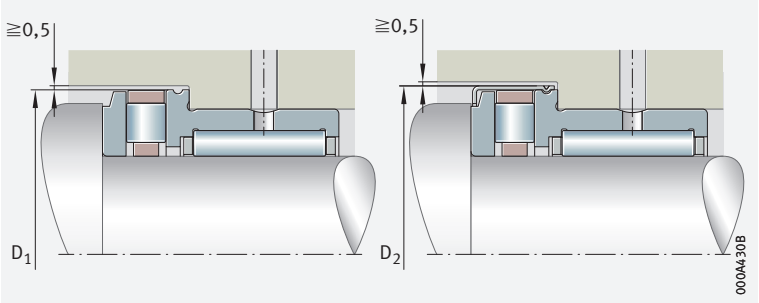

Raceway for bearings without an inner ring (direct bearing arrangement)

Produce the raceway as a rolling bearing raceway

Where needle roller bearings without an inner ring are used (so-called direct bearing arrangements), the rolling elements run directly on the shaft. In these bearings, the raceway for the rolling elements on the shaft must be produced as a rolling bearing raceway (hardened and ground). Tolerances and surface designs are shown in ➤990 9. The surface hardness of the raceway must be 670 HV to 840 HV, the hardening depth CHD or SHD must be sufficiently large. If the shaft cannot be produced as a raceway, the bearings can be combined with inner rings IR ➤974 *2.1* and ➤994.

9
Tolerance classes and surface design for the shaft (direct bearing arrangement) – without inner ring

Series	Shaft tolerance	Roundness tolerance max.	Parallelism tolerance max.	Recommended mean roughness value Ramax (Rzmax) µm
NX, NKX, NKXR	k6 Ⓔ	IT3	IT3	0,1 (0,4)

Shaft raceway designed in accordance with DIN 617

If the surface of the shaft raceway is produced to DIN 617, the basic load ratings C_r in the product tables must be reduced by 15%.

Steels for the raceway

Through hardening steels

Through hardening steels in accordance with ISO 683-17 (e.g. 100Cr6) are suitable as materials for rolling bearing raceways in direct bearing arrangements. These steels can also be surface layer hardened.

Case hardening steels

Case hardening steels must correspond to DIN EN ISO 683-17 (such as 17MnCr5, 18CrNiMo7-6) or DIN EN ISO 683-3 (such as 16MnCr5).

Steels for inductive surface layer hardening

For flame and induction hardening, steels in accordance with DIN EN ISO 683-17 (e.g. C56E2, 43CrMo4) or DIN 17212 (e.g. Cf53) should be used.

Surface hardness and hardening depth

✎ *Nominal surface hardness: ≧ 670 HV*

The requisite minimum surface hardness of 670 HV is valid for raceways, axial washers and shaft shoulders. Steels hardened by means of case, flame or induction hardening must have a surface hardness of 670 HV to 840 HV and an adequate hardening depth CHD or SHD.

Raceway hardness of less than 670 HV

If the raceway fulfils the requirements for rolling bearing materials but the raceway hardness is less than 670 HV (58 HRC), the static and dynamic load carrying capacity of the bearing is reduced. In order to determine the dynamic and static load carrying capacity of the bearing arrangement, the basic dynamic load rating C of the bearings must be multiplied by the reduction factor f_H (dynamic hardness factor) and the basic static load rating C_{0r} by the reduction factor f_{H0} (static hardness factor).

19
Dynamic hardness factor for raceway hardness values of less than 670 HV

f_H = *dynamic hardness factor*
HV, HRC = *surface hardness*

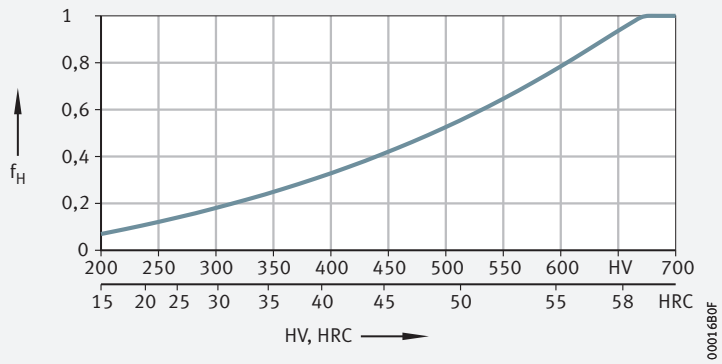

20
Static hardness factor for raceway hardness values of less than 670 HV

f_{H0} = *static hardness factor*
HV, HRC = *surface hardness*

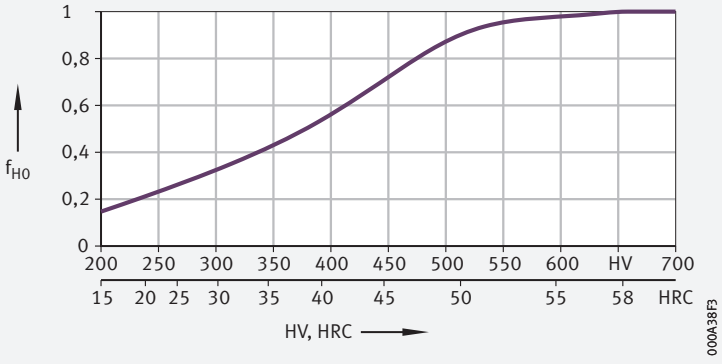

Determining the case hardening depth

Approximation value for case hardening depth

The reference value for the load present is the equivalent stress in accordance with the distortion energy hypothesis (DEH) as a function of the rolling element diameter D_w and the magnitude of the load.

For calculation of the case hardening depth CHD, the following applies:

f 6 *Case hardening depth*

$$CHD \geqq 0{,}052 \cdot D_w$$

Legend

CHD	mm	Case hardening depth
D_w	mm	Rolling element diameter.

The local hardness must always be above the local requisite hardness, which can be calculated from the equivalent stress.

Determining the surface hardening depth

In these surface hardening methods, the load and contact geometry must be taken into consideration when determining the requisite hardening depth.

For the calculation of the surface hardening depth SHD applies:

f 7 *Surface hardening depth*

$$SHD \geqq 140 \cdot D_w / R_{p0,2}$$

Legend

SHD	mm	Surface hardening depth
D_w	mm	Rolling element diameter
$R_{p0,2}$	N/mm²	Yield point of base material.

2.17 Mounting and dismounting

The mounting and dismounting options for combined needle roller bearings, by thermal, hydraulic or mechanical methods, must be taken into consideration in the design of the bearing position.

As the bearings are not self-retaining, they are easy to mount

Combined needle roller bearings without an end cap are not self-retaining. As a result, the bearing parts can be mounted separately from each other ➤*974*|*2.1*. This gives simplified mounting of the bearings, especially when the two bearing rings have a tight fit.

Schaeffler Mounting Handbook

Rolling bearings must be handled with great care

Rolling bearings are well-proven precision machine elements for the design of economical and reliable bearing arrangements, which offer high operational security. In order that these products can function correctly and achieve the envisaged operating life without detrimental effect, they must be handled with care.

The Schaeffler Mounting Handbook MH 1 gives comprehensive information about the correct storage, mounting, dismounting and maintenance of rotary rolling bearings *https://www.schaeffler.de/std/1D53*. It also provides information which should be observed by the designer, in relation to the mounting, dismounting and maintenance of bearings, in the original design of the bearing position. This book is available from Schaeffler on request.

2.18 Legal notice regarding data freshness

✎ The further development of products may also result in technical changes to catalogue products

Of central interest to Schaeffler is the further development and optimisation of its products and the satisfaction of its customers. In order that you, as the customer, can keep yourself optimally informed about the progress that is being made here and with regard to the current technical status of the products, we publish any product changes which differ from the printed version in our electronic product catalogue.

§ We therefore reserve the right to make changes to the data and illustrations in this catalogue. This catalogue reflects the status at the time of printing. More recent publications released by us (as printed or digital media) will automatically precede this catalogue if they involve the same subject. Therefore, please always use our electronic product catalogue to check whether more up-to-date information or modification notices exist for your desired product.

Link to electronic product catalogue

The following link will take you to the Schaeffler electronic product catalogue: *https://medias.schaeffler.com*.

2.19 Further information

In addition to the data in this chapter, the following chapters in Technical principles must also be observed in the design of bearing arrangements:

- Determining the bearing size ➤*34*
- Rigidity ➤*54*
- Friction and increases in temperature ➤*56*
- Speeds ➤*64*
- Bearing data ➤*97*
- Lubrication ➤*70*
- Sealing ➤*185*
- Design of bearing arrangements ➤*141*
- Mounting and dismounting ➤*194*

Needle roller/axial deep groove ball bearings

Without inner ring

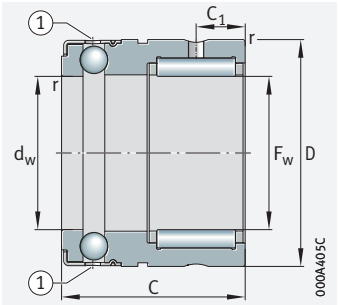

NX

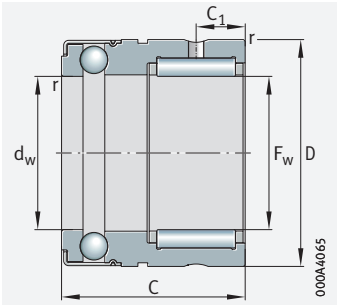

NX..-Z

F_w = 7 – 35 mm

Main dimensions			Basic load ratings				Fatigue limit load		Limiting speed	Mass	Designation ➤985|2.12 ➤985|2.13 X-life ➤978	
F_w	D	C	radial		axial		C_{ur}	C_{ua}	n_G	m	For oil lubrication	For grease lubrication
		–0,25	dyn. C_r	stat. C_{0r}	dyn. C_a	stat. C_{0a}						
			N	N	N	N	N	N	min^{-1}	≈ g		
7	14	18	3 250	2 650	3 150	4 300	420	195	15 000	14	**NX7-TV-XL**	**NX7-Z-TV-XL**
10	19	18	5 000	3 700	4 600	7 200	730	330	11 000	25	**NX10-XL**	**NX10-Z-XL**
12	21	18	5 400	4 300	4 850	8 200	840	375	9 500	28	**NX12-XL**	**NX12-Z-XL**
15	24	28	12 100	12 700	5 600	10 400	2 360	475	8 000	48	**NX15-XL**	**NX15-Z-XL**
17	26	28	13 500	15 000	5 800	11 500	2 800	530	7 500	53	**NX17-XL**	**NX17-Z-XL**
20	30	28	14 600	17 500	7 000	14 700	3 300	670	6 500	68	**NX20-XL**	**NX20-Z-XL**
25	37	30	16 800	22 400	11 100	24 300	4 200	1 110	4 900	115	**NX25-XL**	**NX25-Z-XL**
30	42	30	25 500	36 000	11 700	28 000	6 400	1 270	4 300	130	**NX30-XL**	**NX30-Z-XL**
35	47	30	27 500	41 500	12 400	32 500	7 400	1 480	3 700	160	**NX35-XL**	**NX35-Z-XL**

medias *https://www.schaeffler.de/std/1F9A*

① Holes for lubricating oil

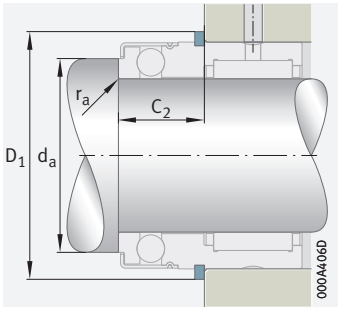

Mounting dimensions
Snap ring in outer ring

Dimensions				Mounting dimensions				Designation	
F_w	C_1	d_w E8	r min.	C_2	D_1	d_a	r_a max.	Recommended inner rings ➤*1002*	Suitable snap rings
7	4,7	7	0,3	10	16,5	9,6	0,3	–	**WR14, SW14**
10	4,7	10	0,3	10	21,9	14,6	0,3	**IR6×10×10-IS1-XL**	**WR19, SW19**
12	4,7	12	0,3	10	23,7	16,6	0,3	**IR8×12×10-IS1-XL**	**WR21, SW21**
15	8	15	0,3	12,2	26,5	19	0,3	**IR12×15×16-XL**	**WR24, SW24**
17	8	17	0,3	12,2	28,5	21	0,3	**IR14×17×17-XL**	**WR26, SW26**
20	8	20	0,3	12,2	33,6	25	0,3	**IR17×20×16-XL**	**WR30, SW30**
25	8	25	0,3	14,2	40,4	31,6	0,3	**IR20×25×16-IS1-XL**	**WR37, SW37**
30	10	30	0,3	14,2	45,1	36,5	0,3	**IR25×30×20-XL**	**WR42, SW42**
35	10	35	0,3	14,2	50,1	40,5	0,3	**IR30×35×20-XL**	**WR47, SW47**

Needle roller/axial deep groove ball bearings

Without inner ring
With or without end cap

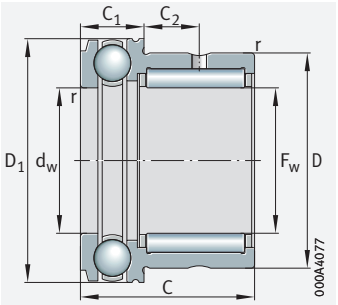

NKX

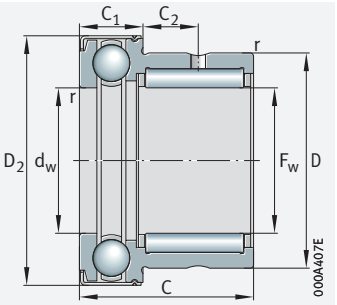

NKX..-Z

F_w = 10 – 70 mm

Main dimensions			Basic load ratings				Fatigue limit load		Limiting speed	Mass		Designation ➤985|2.12 ➤985|2.13 X-life ➤978	
			radial		axial					Without end cap	With end cap	Without end cap	With end cap
F_w	D	C	dyn. C_r	stat. C_{0r}	dyn. C_a	stat. C_{0a}	C_{ur}	C_{ua}	n_G	m	m		
		–0,25	N	N	N	N	N	N	min^{-1}	≈ g	≈ g		
10	19	23	7 000	7 800	10 000	14 000	1 330	690	12 400	34	36	**NKX10-TV-XL**	**NKX10-Z-TV-XL**
12	21	23	10 100	11 000	10 300	15 400	1 950	760	11 000	38	40	**NKX12-XL**	**NKX12-Z-XL**
15	24	23	12 100	12 700	10 500	16 800	2 360	830	9 500	44	47	**NKX15-XL**	**NKX15-Z-XL**
17	26	25	13 500	15 000	10 800	18 200	2 800	900	8 500	53	55	**NKX17-XL**	**NKX17-Z-XL**
20	30	30	18 600	23 800	14 200	24 700	4 200	1 220	7 500	83	90	**NKX20-XL**	**NKX20-Z-XL**
25	37	30	21 300	30 500	19 600	37 500	5 400	1 840	6 000	125	132	**NKX25-XL**	**NKX25-Z-XL**
30	42	30	25 500	36 000	20 400	42 000	6 400	2 090	5 000	141	148	**NKX30-XL**	**NKX30-Z-XL**
35	47	30	27 500	41 500	21 200	47 000	7 400	2 340	4 600	163	168	**NKX35-XL**	**NKX35-Z-XL**
40	52	32	29 500	47 000	27 000	63 000	8 400	3 100	4 000	200	208	**NKX40-XL**	**NKX40-Z-XL**
45	58	32	31 000	53 000	28 000	69 000	9 400	3 400	3 600	252	265	**NKX45-XL**	**NKX45-Z-XL**
50	62	35	43 000	74 000	29 000	75 000	12 900	3 750	3 300	280	300	**NKX50-XL**	**NKX50-Z-XL**
60	72	40	47 500	90 000	41 500	113 000	15 600	5 600	2 800	360	380	**NKX60-XL**	**NKX60-Z-XL**
70	85	40	50 000	92 000	43 000	127 000	16 000	6 300	2 400	500	520	**NKX70-XL**	**NKX70-Z-XL**

medias *https://www.schaeffler.de/std/1F9A*

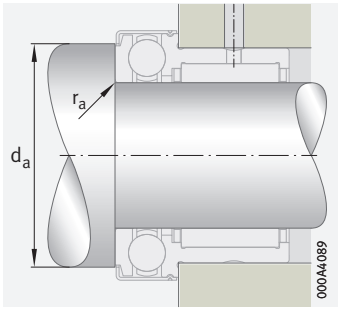

Mounting dimensions

Dimensions							Mounting dimensions		Designation
									Recommended inner rings ➤ *1002*
F_w	D_1 max.	D_2 max.	C_1 –0,2	C_2	d_w E8	r min.	d_a	r_a max.	
10	24,1	25,2	9	6,5	10	0,3	19,7	0,3	**IR7×10×16-XL**
12	26,1	27,2	9	6,5	12	0,3	21,7	0,3	**IR9×12×16-XL**
15	28,1	29,2	9	6,5	15	0,3	23,7	0,3	**IR12×15×16-XL**
17	30,1	31,2	9	8	17	0,3	25,7	0,3	**IR14×17×17-XL**
20	35,1	36,2	10	10,5	20	0,3	30,7	0,3	**IR17×20×20-XL**
25	42,1	43,2	11	9,5	25	0,6	37,7	0,6	**IR20×25×20-XL**
30	47,1	48,2	11	9,5	30	0,6	42,7	0,6	**IR25×30×20-XL**
35	52,1	53,2	12	9	35	0,6	47,7	0,6	**IR30×35×20-XL**
40	60,1	61,2	13	10	40	0,6	55,7	0,6	**IR35×40×20-XL**
45	65,2	66,5	14	9	45	0,6	60,5	0,6	**IR40×45×20-XL**
50	70,2	71,5	14	10	50	0,6	65,5	0,6	**IR45×50×25-XL**
60	85,2	86,5	17	12	60	1	80,5	1	**IR50×60×25-XL**
70	95,2	96,5	18	11	70	1	90,5	1	**IR60×70×25-XL**

Needle roller/axial cylindrical roller bearings

Without inner ring
With or without end cap

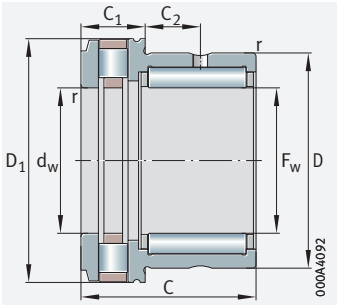

NKXR

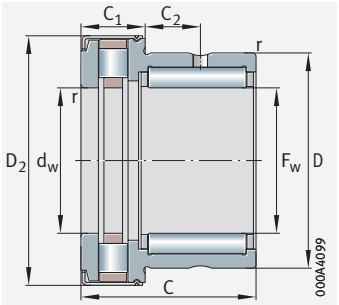

NKXR..-Z

F_w = 15 – 50 mm

Main dimensions			Basic load ratings				Limiting speed	Speed rating	Mass		Designation ➤985|2.12 ➤985|2.13 X-life ➤978	
			radial		axial				Without end cap	With end cap	Without end cap	With end cap
F_w	D	C	dyn. C_r	stat. C_{0r}	dyn. C_a	stat. C_{0a}	n_G	$n_{\vartheta r}$	m	m		
		–0,25	N	N	N	N	min^{-1}	min^{-1}	≈ g	≈ g		
15	24	23	12 100	12 700	14 400	28 500	13 000	6 500	42	45	**NKXR15-XL**	**NKXR15-Z-XL**
17	26	25	13 500	15 000	16 000	33 500	12 000	5 500	50	53	**NKXR17-XL**	**NKXR17-Z-XL**
20	30	30	18 600	23 800	25 000	53 000	10 000	4 200	80	84	**NKXR20-XL**	**NKXR20-Z-XL**
25	37	30	21 300	30 500	33 500	76 000	8 500	3 400	120	125	**NKXR25-XL**	**NKXR25-Z-XL**
30	42	30	25 500	36 000	35 500	86 000	7 500	2 900	135	141	**NKXR30-XL**	**NKXR30-Z-XL**
35	47	30	27 500	41 500	39 000	101 000	6 500	2 500	157	165	**NKXR35-XL**	**NKXR35-Z-XL**
40	52	32	29 500	47 000	56 000	148 000	6 000	2 000	204	214	**NKXR40-XL**	**NKXR40-Z-XL**
45	58	32	31 000	53 000	59 000	163 000	5 000	1 900	244	260	**NKXR45-XL**	**NKXR45-Z-XL**
50	62	35	43 000	74 000	62 000	177 000	4 800	1 700	268	288	**NKXR50-XL**	**NKXR50-Z-XL**

medias *https://www.schaeffler.de/std/1F9A*

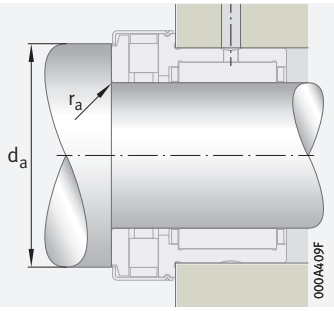

Mounting dimensions

	Fatigue limit load		Dimensions						Mounting dimensions		Designation
											Recommended inner rings ➤*1002*
F_w	C_{ur}	C_{ua}	D_1	D_2	C_1	C_2	d_w	r	d_a	r_a	
	N	N	max.	max.	–0,2		E8	min.		max.	
15	2 360	4 050	28,1	29,2	9	6,5	15	0,3	23,7	0,3	**IR12×15×16-XL**
17	2 800	4 700	30,1	31,2	9	8	17	0,3	25,7	0,3	**IR14×17×17-XL**
20	4 200	7 500	35,1	36,2	10	10,5	20	0,3	30,7	0,3	**IR17×20×20-XL**
25	5 400	7 200	42,1	43,2	11	9,5	25	0,6	37,7	0,6	**IR20×25×20-XL**
30	6 400	8 200	47,1	48,2	11	9,5	30	0,6	42,7	0,6	**IR25×30×20-XL**
35	7 400	9 600	52,1	53,2	12	9	35	0,6	47,7	0,6	**IR30×35×20-XL**
40	8 400	14 800	60,1	61,2	13	10	40	0,6	55,7	0,6	**IR35×40×20-XL**
45	9 400	16 300	65,2	66,5	14	9	45	0,6	60,6	0,6	**IR40×45×20-XL**
50	12 900	17 700	70,2	71,5	14	10	50	0,6	65,5	0,6	**IR45×50×25-XL**

Needle roller/angular contact ball bearings

With inner ring

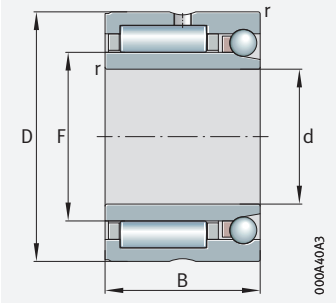

NKIA
Single direction

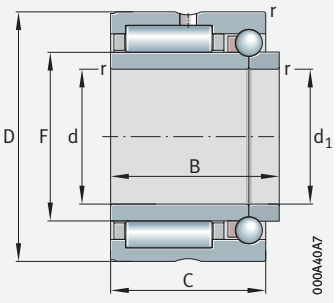

NKIB
Double direction

d = 12 – 70 mm

Main dimensions			Basic load ratings				Fatigue limit load		Limiting speed	Speed rating	Mass	Designation ➤985|2.12 ➤985|2.13 X-life ➤978
d	D	B	radial		axial		C_{ur}	C_{ua}	n_G	$n_{\vartheta r}$	m	
			dyn. C_r	stat. C_{0r}	dyn. C_a	stat. C_{0a}						
			N	N	N	N	N	N	min^{-1}	min^{-1}	≈ g	
12	24	16	8 600	8 300	2 700	3 450	1 660	157	23 600	21 000	40	**NKIA5901-XL**
	24	17,5	8 600	8 300	2 700	3 450	1 660	157	23 600	21 000	43	**NKIB5901-XL**
15	28	18	12 000	13 600	2 900	4 200	2 470	191	21 600	17 000	50	**NKIA5902-XL**
	28	20	12 000	13 600	2 900	4 200	2 470	191	21 600	17 000	52	**NKIB5902-XL**
17	30	18	12 400	14 600	3 150	4 900	2 650	222	20 600	15 000	56	**NKIA5903-XL**
	30	20	12 400	14 600	3 150	4 900	2 650	222	20 600	15 000	58	**NKIB5903-XL**
20	37	23	23 700	25 500	4 900	7 400	4 700	335	17 200	14 000	103	**NKIA5904-XL**
	37	25	23 700	25 500	4 900	7 400	4 700	335	17 200	14 000	107	**NKIB5904-XL**
22	39	23	26 000	29 500	5 300	8 600	5 400	395	16 100	12 000	118	**NKIA59/22-XL**
	39	25	26 000	29 500	5 300	8 600	5 400	395	16 100	12 000	122	**NKIB59/22-XL**
25	42	23	26 500	31 500	5 400	9 300	5 800	420	14 600	12 000	130	**NKIA5905-XL**
	42	25	26 500	31 500	5 400	9 300	5 800	420	14 600	12 000	134	**NKIB5905-XL**
30	47	23	28 500	35 500	5 900	11 200	6 600	510	12 700	10 000	147	**NKIA5906-XL**
	47	25	28 500	35 500	5 900	11 200	6 600	510	12 700	10 000	151	**NKIB5906-XL**
35	55	27	35 500	50 000	7 400	14 900	9 600	680	10 900	9 000	243	**NKIA5907-XL**
	55	30	35 500	50 000	7 400	14 900	9 600	680	10 900	9 000	247	**NKIB5907-XL**
40	62	30	48 500	67 000	9 200	19 400	11 700	880	9 600	7 500	315	**NKIA5908-XL**
	62	34	48 500	67 000	9 200	19 400	11 700	880	9 600	7 500	320	**NKIB5908-XL**
45	68	30	51 000	73 000	9 600	21 400	12 900	970	8 700	7 000	375	**NKIA5909-XL**
	68	34	51 000	73 000	9 600	21 400	12 900	970	8 700	7 000	380	**NKIB5909-XL**
50	72	30	53 000	80 000	10 100	24 300	14 100	1 110	8 000	6 500	380	**NKIA5910-XL**
	72	34	53 000	80 000	10 100	24 300	14 100	1 110	8 000	6 500	385	**NKIB5910-XL**
55	80	34	65 000	100 000	12 100	29 500	17 600	1 340	7 300	6 000	550	**NKIA5911-XL**
	80	38	65 000	100 000	12 100	29 500	17 600	1 340	7 300	6 000	555	**NKIB5911-XL**
60	85	34	68 000	108 000	12 400	32 000	19 100	1 450	6 800	5 500	590	**NKIA5912-XL**
	85	38	68 000	108 000	12 400	32 000	19 100	1 450	6 800	5 500	595	**NKIB5912-XL**
65	90	34	69 000	112 000	12 800	34 000	19 900	1 560	6 300	5 500	635	**NKIA5913-XL**
	90	38	69 000	112 000	12 800	34 000	19 900	1 560	6 300	5 500	640	**NKIB5913-XL**
70	100	40	95 000	156 000	16 800	44 500	28 000	2 020	5 800	4 900	980	**NKIA5914-XL**
	100	45	95 000	156 000	16 800	44 500	28 000	2 020	5 800	4 900	985	**NKIB5914-XL**

medias *https://www.schaeffler.de/std/1F9A*

	Dimensions			
	d	F	C	r min.
	12	16	–	0,3
		16	16	0,3
	15	20	–	0,3
		20	18	0,3
	17	22	–	0,3
		22	18	0,3
	20	25	–	0,3
		25	23	0,3
	22	28	–	0,3
		28	23	0,3
	25	30	–	0,3
		30	23	0,3
	30	35	–	0,3
		35	23	0,3
	35	42	–	0,6
		42	27	0,6
	40	48	–	0,6
		48	30	0,6
	45	52	–	0,6
		52	30	0,6
	50	58	–	0,6
		58	30	0,6
	55	63	–	1
		63	34	1
	60	68	–	1
		68	34	1
	65	72	–	1
		72	34	1
	70	80	–	1
		80	40	1



3 Inner rings

Inner rings are used where:

- the shaft cannot be used as a rolling bearing raceway for needle roller and cage assemblies, drawn cup needle roller bearings with open ends, drawn cup needle roller bearings with closed end and needle roller bearings (it cannot be hardened and ground)
- needle roller bearings must be combined with wider inner rings in order to allow larger axial displacements of the shaft in relation to the housing (e.g. in bearings with a non-locating bearing function)
- optimum running surfaces are required for seal lips ➤*1002*|🗀*1* and ➤*1004*|🗀*4*

🗀**1**
Wider inner ring, outside surface used as raceway for seal lip

① *Inner ring IR*
② *Sealing ring G*

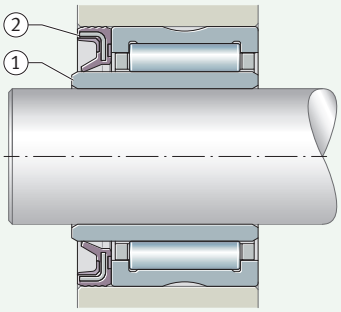

3.1 Product design

✎ *Design variants*

The bearing components are available as:

- inner ring IR ➤*1002*|🗀*2*
- inner ring LR ➤*1003*|🗀*3*

Inner rings IR

✎ *The raceway is precision machined*

Inner rings IR are made from hardened rolling bearing steel and have precision machined raceways ➤*1002*|🗀*2*. Chamfers on the end faces facilitate the matching of the rings with the needle roller and cage assembly or of the bearing ring with the needle roller set and prevent damage to the seal lips of the bearings. Inner rings are available with and without a lubrication hole ➤*1002*|🗀*2*. Rings with a lubrication hole have the suffix IS1 ➤*1005*|*3.5*, ➤*1008*|▦.

Inner rings are also available by agreement with several lubrication holes.

🗀**2**
Inner rings IR

① *Inner ring without lubrication hole*
② *Inner ring with lubrication hole*

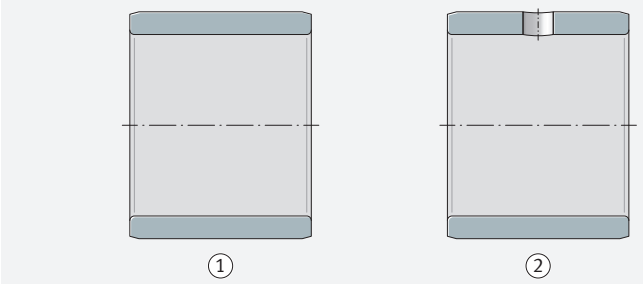

X-life premium quality

Inner rings IR are supplied in the X-life design. The quality of the inner rings corresponds to the quality of X-life needle roller bearings. X-life inner rings include the suffix XL in the designation ➤*1006*|*6*.

X-life indicates a high product performance density and thus a particularly significant benefit to the customer. Further information on X-life ➤*10*.

Inner rings with the machining allowance “z” (special design)

z = a material allowance for finish grinding of the rings after fitting, where there are high demands on running accuracy

Inner rings are also available as a special design with a machining allowance “z” on the raceway. These inner rings have the suffix VGS ➤*1005*|*3.5*. The size of the machining allowance is dependent on the diameter of the inner ring raceway ➤*1003*|*1*. The raceway is finish ground once the rings have been fitted, if high demands are placed on the running accuracy of the bearings.

1
Machining allowance

Raceway diameter F mm		Machining allowance z mm	Preground raceway diameter F_{VGS}
over	incl.		
–	50	0,1	$F_{VGS} = F + z$ (tolerance h7 Ⓔ)
50	80	0,15	
80	180	0,2	
180	250	0,25	
250	315	0,3	
315	400	0,35	
400	500	0,4	

Inner rings LR

The raceway is ground

Inner rings LR are produced from rolling bearing steel and are hardened ➤*1003*|*3*. The bore and running surface are ground. The end faces are not ground (turned) and the edges are broken. These rings have larger tolerances than the inner rings IR. As a result, they are particularly suitable for applications that allow larger width tolerances and less demanding requirements for axial runout. It is here that they give particularly economical bearing arrangements.

Catalogue HR 1 does not contain separate product tables for inner rings LR. Available inner rings LR are listed in the product tables for drawn cup needler roller bearings with open ends and with closed end ➤*910*|.

For other available dimensions, please consult Schaeffler.

3
Inner ring LR

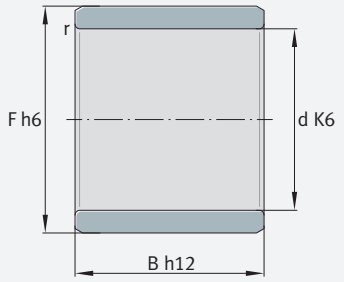

d = *bore diameter*
F = *raceway diameter*
B = *width*

Wider inner rings

✎ *Advantages of wider inner rings*

The inner rings are available in several widths within the respective bore diameters ➤*1008*|▦. Wider inner rings:

- permit larger axial displacements of the shaft in relation to the housing
- can be used as the running surface for the lips of contact seals, for example when using sealing rings G, GR and SD ➤*1004*|⧉ *4*

⧉ *4*
Wider inner ring, also used as running surface for sealing rings

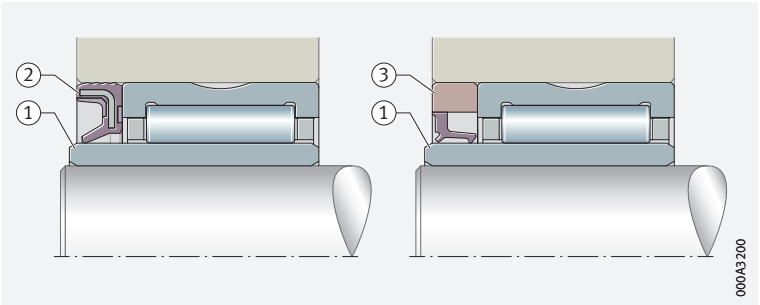

① *Wider inner ring IR*
② *Sealing ring G*
③ *Sealing ring SD*

3.2 Temperature range

✎ *Limiting values*

The operating temperature of the inner rings is limited by the dimensional stability of the ring material ➤*1004*|▦ *2*.

▦ *2*
Permissible temperature ranges

Operating temperature	Inner rings
	–30 °C to +120 °C

In the event of anticipated temperatures which lie outside the stated values, please contact Schaeffler.

3.3 Internal clearance

✎ *CN for the combination of needler roller bearing/inner ring*

The radial internal clearance is dependent on the bearing design used in combination with the inner ring. When combined with Schaeffler needle roller bearings, inner rings have a radial internal clearance of CN ➤*1004*|▦ *3*.

✎ *C2 to C3 for the combination of drawn cup needle roller bearing with open ends or closed end/inner ring*

When combined with Schaeffler drawn cup needle roller bearings with open ends or closed end, inner rings have an internal clearance of C2 to C3, depending on the raceway diameter ➤*1004*|▦ *3*.

The values for radial internal clearance correspond to DIN 620-4:2004 (ISO 5753-1:2009). These are valid for bearings which are free from load and measurement forces (without elastic deformation).

▦ *3*
Radial internal clearance

Nominal bore diameter		Radial internal clearance							
d		C2 (Group 2)		CN (Group N)		C3 (Group 3)		C4 (Group 4)	
mm		µm		µm		µm		µm	
over	incl.	min.	max.	min.	max.	min.	max.	min.	max.
–	24	0	25	20	45	35	60	50	75
24	30	0	25	20	45	35	60	50	75
30	40	5	30	25	50	45	70	60	85
40	50	5	35	30	60	50	80	70	100

continued ▼

3 *Radial internal clearance*

Nominal bore diameter d mm		Radial internal clearance							
		C2 (Group 2) µm		CN (Group N) µm		C3 (Group 3) µm		C4 (Group 4) µm	
over	incl.	min.	max.	min.	max.	min.	max.	min.	max.
50	65	10	40	40	70	60	90	80	110
65	80	10	45	40	75	65	100	90	125
80	100	15	50	50	85	75	110	105	140
100	120	15	55	50	90	85	125	125	165
120	140	15	60	60	105	100	145	145	190
140	160	20	70	70	120	115	165	165	215
160	180	25	75	75	125	120	170	170	220
180	200	35	90	90	145	140	195	195	250
200	225	45	105	105	165	160	220	220	280
225	250	45	110	110	175	170	235	235	300
250	280	55	125	125	195	190	260	260	330
280	315	55	130	130	205	200	275	275	350
315	355	65	145	145	225	225	305	305	385
355	400	100	190	190	280	280	370	370	460
400	450	110	210	210	310	310	410	410	510

continued ▲

3.4 Tolerances

The tolerances for the dimensional and running accuracy of inner rings IR correspond to tolerance class Normal in accordance with ISO 492:2014. Tolerance values in accordance with ISO 492 ➤ *124* | *8*.

3.5 Suffixes

Suffixes describe the design and features of a bearing in more detail.

4 *Suffixes and corresponding descriptions*

Suffix	Description of suffix	
C2	Radial internal clearance C2 (smaller than normal)	Standard or special design, depending on the rolling bearing used
C3	Radial internal clearance C3 (larger than normal)	
C4	Radial internal clearance C4 (larger than C3)	
EGS	Surface ground free from spiral marks for rotary shaft seals to DIN 3760 and DIN 3761	Special design, available by agreement
IS1	With lubrication hole	Standard for IR inner rings within certain limits
VGS	Machining allowance “z” on raceway ➤ *1003*	*1*	Special design, available by agreement

3.6 Structure of bearing designation

With ***medias*** interchange, equivalent Schaeffler bearing designations can be determined for bearing designations from other rolling bearing manufacturers *https://www.schaeffler.de/std/1B69*.

The designation of inner rings follows a set model. Examples ➤*1006*|*5* and ➤*1006*|*6*.

5
Inner ring LR: designation structure

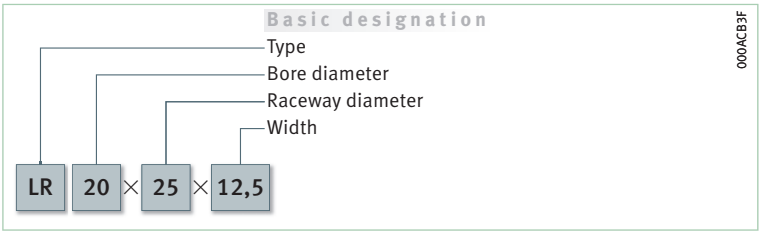

6
Inner ring IR with lubrication hole: designation structure

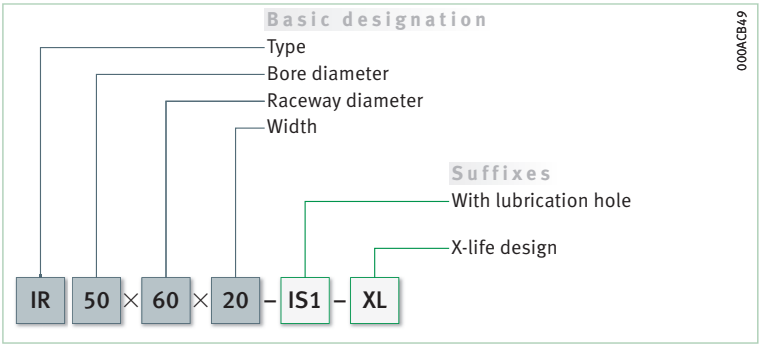

3.7 Design of bearing arrangements

Axial location of inner rings

Always locate inner rings axially on both sides

The bearing rings must not be allowed to undergo lateral creep. In order to reliably prevent axial displacements of the inner rings on the shaft where a tight or loose fit is present, these must be located axially on both sides. On one side, the rings can be abutted against a shaft shoulder and, for location on the opposing side, retaining rings, spacer rings or shaft nuts are suitable ➤*1007*|*7*.

Design of adjacent parts

The abutment shoulders for the rings should be sufficiently high and perpendicular to the bearing axis. The transition from the bearing seat to the abutment shoulder must be designed with rounding to DIN 5418 or an undercut to DIN 509. In this instance, the minimum values for the chamfer dimensions in the product tables must be observed ➤*1008*|.

The overlap between the retaining rings and the end faces of the bearing rings must be sufficiently large ➤*1007*|*7*.

The maximum chamfer dimensions for the inner rings in accordance with DIN 620-6 must be taken into consideration.

7
Inner ring axially located on both sides

① *Retaining ring*
② *Drawn cup needle roller bearing with open ends HK*
③ *Shaft shoulder*
④ *Inner ring IR*

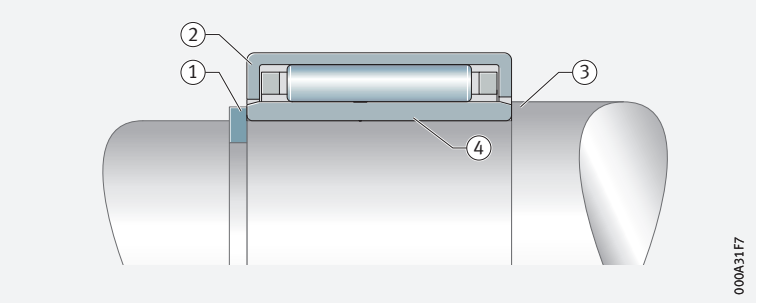

3.8 Mounting and dismounting

Schaeffler Mounting Handbook

Rolling bearings must be handled with great care

Rolling bearings are well-proven precision machine elements for the design of economical and reliable bearing arrangements, which offer high operational security. In order that these products can function correctly and achieve the envisaged operating life without detrimental effect, they must be handled with care.

The Schaeffler Mounting Handbook MH 1 gives comprehensive information about the correct storage, mounting, dismounting and maintenance of rotary rolling bearings *https://www.schaeffler.de/std/1D53*. It also provides information which should be observed by the designer, in relation to the mounting, dismounting and maintenance of bearings, in the original design of the bearing position. This book is available from Schaeffler on request.

3.9 Legal notice regarding data freshness

The further development of products may also result in technical changes to catalogue products

Of central interest to Schaeffler is the further development and optimisation of its products and the satisfaction of its customers. In order that you, as the customer, can keep yourself optimally informed about the progress that is being made here and with regard to the current technical status of the products, we publish any product changes which differ from the printed version in our electronic product catalogue.

We therefore reserve the right to make changes to the data and illustrations in this catalogue. This catalogue reflects the status at the time of printing. More recent publications released by us (as printed or digital media) will automatically precede this catalogue if they involve the same subject. Therefore, please always use our electronic product catalogue to check whether more up-to-date information or modification notices exist for your desired product.

Link to electronic product catalogue

The following link will take you to the Schaeffler electronic product catalogue: *https://medias.schaeffler.com*.

Inner rings

Without lubrication hole

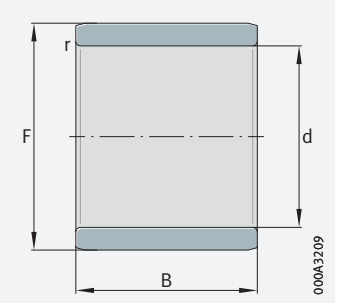

IR

d = 5 – 25 mm

Main dimensions				Mass	Designation ➤*1005*|*3.5* ➤*1006*|*3.6* X-life ➤*1003*	Deviations for raceway F	
d	F	B	r min.	m ≈ g		upper µm	lower µm
5	8	12	0,3	2,8	**IR5×8×12-XL**	–7	–23
	8	16	0,3	3,7	**IR5×8×16-XL**	–7	–23
6	9	12	0,3	3	**IR6×9×12-XL**	–7	–23
	9	16	0,3	4,3	**IR6×9×16-XL**	–7	–23
7	10	10,5	0,3	3,1	**IR7×10×10,5-XL**	–7	–23
	10	12	0,3	3,6	**IR7×10×12-XL**	–7	–23
	10	16	0,3	4,9	**IR7×10×16-XL**	–7	–23
8	12	10,5	0,3	5	**IR8×12×10,5-XL**	–4	–18
	12	12,5	0,3	5,9	**IR8×12×12,5-XL**	–4	–18
9	12	12	0,3	4,4	**IR9×12×12-XL**	–4	–18
	12	16	0,3	6	**IR9×12×16-XL**	–4	–18
10	13	12,5	0,3	5,2	**IR10×13×12,5-XL**	–4	–18
	14	13	0,3	7,4	**IR10×14×13-XL**	–4	–18
	14	16	0,3	9,2	**IR10×14×16-XL**	–4	–18
	14	20	0,3	11,5	**IR10×14×20-XL**	–4	–18
12	15	12	0,3	5,7	**IR12×15×12-XL**	–4	–18
	15	12,5	0,3	6,1	**IR12×15×12,5-XL**	–4	–18
	15	16	0,3	7,6	**IR12×15×16-XL**	–4	–18
	15	16,5	0,3	8,1	**IR12×15×16,5-XL**	–4	–18
	15	22,5	0,3	10,9	**IR12×15×22,5-XL**	–4	–18
	16	13	0,3	8,5	**IR12×16×13-XL**	–4	–18
	16	16	0,3	10,7	**IR12×16×16-XL**	–4	–18
	16	20	0,3	13,5	**IR12×16×20-XL**	–4	–18
	16	22	0,3	14,9	**IR12×16×22-XL**	–4	–18
14	17	17	0,3	9,5	**IR14×17×17-XL**	–4	–18
15	18	16	0,3	9,4	**IR15×18×16-XL**	–4	–18
	18	16,5	0,3	9,8	**IR15×18×16,5-XL**	–4	–18
	19	16	0,3	12,9	**IR15×19×16-XL**	0	–12
	19	20	0,3	16,3	**IR15×19×20-XL**	0	–12
	20	13	0,3	13,5	**IR15×20×13-XL**	0	–12
	20	23	0,3	24,4	**IR15×20×23-XL**	0	–12

medias *https://www.schaeffler.de/std/1F9A*

Main dimensions				Mass	Designation ➤*1005*|*3.5* ➤*1006*|*3.6* X-life ➤*1003*	Deviations for raceway F	
d	F	B	r	m		upper	lower
			min.	≈ g		µm	µm
17	20	16	0,3	10,6	**IR17×20×16-XL**	0	–12
	20	16,5	0,3	11,1	**IR17×20×16,5-XL**	0	–12
	20	20	0,3	13,5	**IR17×20×20-XL**	0	–12
	20	20,5	0,3	13,8	**IR17×20×20,5-XL**	0	–12
	20	30,5	0,3	20,6	**IR17×20×30,5-XL**	0	–12
	21	16	0,3	15	**IR17×21×16-XL**	0	–12
	21	20	0,3	18	**IR17×21×20-XL**	0	–12
	22	13	0,3	14,9	**IR17×22×13-XL**	0	–12
	22	16	0,3	18,4	**IR17×22×16-XL**	0	–12
	22	23	0,3	27,1	**IR17×22×23-XL**	0	–12
	24	20	0,6	33,8	**IR17×24×20-XL**	0	–12
20	24	16	0,3	15	**IR20×24×16-XL**	0	–12
	24	20	0,3	21,3	**IR20×24×20-XL**	0	–12
	25	17	0,3	25	**IR20×25×17-XL**	0	–12
	25	20	0,3	27,5	**IR20×25×20-XL**	0	–12
	25	20,5	0,3	27,4	**IR20×25×20,5-XL**	0	–12
	25	26,5	0,3	38	**IR20×25×26,5-XL**	0	–12
	25	30	0,3	40,4	**IR20×25×30-XL**	0	–12
	25	38,5	0,3	52,5	**IR20×25×38,5-XL**	0	–12
	28	20	0,6	45,2	**IR20×28×20-XL**	0	–12
22	26	16	0,3	18,2	**IR22×26×16-XL**	0	–12
	28	17	0,3	29,5	**IR22×28×17-XL**	0	–12
	26	20	0,3	23	**IR22×26×20-XL**	0	–12
	28	20	0,3	35	**IR22×28×20-XL**	0	–12
	28	20,5	0,3	36	**IR22×28×20,5-XL**	0	–12
	28	30	0,3	54,4	**IR22×28×30-XL**	0	–12
25	29	20	0,3	25,9	**IR25×29×20-XL**	0	–12
	29	30	0,3	39,3	**IR25×29×30-XL**	0	–12
	30	17	0,3	27,4	**IR25×30×17-XL**	0	–12
	30	20	0,3	32,8	**IR25×30×20-XL**	0	–12
	30	20,5	0,3	33,4	**IR25×30×20,5-XL**	0	–12
	30	26,5	0,3	46	**IR25×30×26,5-XL**	0	–12
	30	30	0,3	53	**IR25×30×30-XL**	0	–12
	30	32	0,3	56	**IR25×30×32-XL**	0	–12
	30	38,5	0,3	64,5	**IR25×30×38,5-XL**	0	–12
	32	22	0,6	52,5	**IR25×32×22-XL**	+5	–4

medias *https://www.schaeffler.de/std/1F9A*

Inner rings

Without lubrication hole

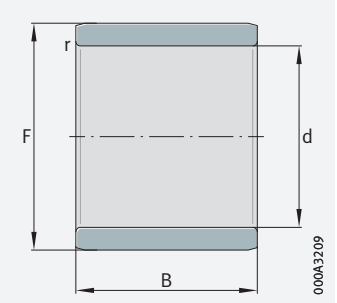

IR

d = 28 – 70 mm

Main dimensions				Mass	Designation ➤*1005*|*3.5* ➤*1006*|*3.6* X-life ➤*1003*	Deviations for raceway F	
d	F	B	r	m		upper	lower
			min.	≈ g		µm	µm
28	32	17	0,3	24,5	**IR28×32×17-XL**	+5	−4
	32	20	0,3	28,5	**IR28×32×20-XL**	+5	−4
	32	30	0,3	43,5	**IR28×32×30-XL**	+5	−4
30	35	13	0,3	25	**IR30×35×13-XL**	+5	−4
	35	16	0,3	34	**IR30×35×16-XL**	+5	−4
	35	17	0,3	36	**IR30×35×17-XL**	+5	−4
	35	20	0,3	39	**IR30×35×20-XL**	+5	−4
	35	20,5	0,3	39,7	**IR30×35×20,5-XL**	+5	−4
	35	26	0,3	50,4	**IR30×35×26-XL**	+5	−4
	35	30	0,3	58,5	**IR30×35×30-XL**	+5	−4
	37	18	0,6	50	**IR30×37×18-XL**	+5	−4
	37	22	0,6	61,6	**IR30×37×22-XL**	+5	−4
32	37	20	0,3	42	**IR32×37×20-XL**	0	−9
	37	30	0,3	62	**IR32×37×30-XL**	0	−9
	40	20	0,6	68	**IR32×40×20-XL**	0	−9
	40	36	0,6	124	**IR32×40×36-XL**	0	−9
33	37	13	0,3	21,9	**IR33×37×13-XL**	0	−9
35	40	17	0,3	37,8	**IR35×40×17-XL**	0	−9
	40	20	0,3	44,2	**IR35×40×20-XL**	0	−9
	40	20,5	0,3	46,1	**IR35×40×20,5-XL**	0	−9
	40	30	0,3	67,1	**IR35×40×30-XL**	0	−9
	42	36	0,6	117,2	**IR35×42×36-XL**	0	−9
	43	22	0,6	82	**IR35×43×22-XL**	0	−9
38	43	20	0,3	48,1	**IR38×43×20-XL**	0	−9
	43	30	0,3	73,6	**IR38×43×30-XL**	0	−9
40	45	17	0,3	42,5	**IR40×45×17-XL**	0	−9
	45	20	0,3	50,8	**IR40×45×20-XL**	0	−9
	45	20,5	0,3	51,8	**IR40×45×20,5-XL**	0	−9
	45	30	0,3	84	**IR40×45×30-XL**	0	−9
	48	22	0,6	91,6	**IR40×48×22-XL**	0	−9
	48	40	0,6	170	**IR40×48×40-XL**	0	−9
	50	22	1	118	**IR40×50×22-XL**	0	−9
42	47	20	0,3	52,8	**IR42×47×20-XL**	−5	−19
	47	30	0,3	81	**IR42×47×30-XL**	−5	−19

medias *https://www.schaeffler.de/std/1F9A*

Main dimensions				Mass	Designation ➤*1005*|*3.5* ➤*1006*|*3.6* X-life ➤*1003*	Deviations for raceway F	
d	F	B	r	m		upper	lower
			min.	≈ g		µm	µm
45	50	25	0,6	70,8	**IR45×50×25-XL**	–5	–19
	50	25,5	0,3	75,1	**IR45×50×25,5-XL**	–5	–19
	50	35	0,6	101	**IR45×50×35-XL**	–5	–19
	52	22	0,6	89	**IR45×52×22-XL**	0	–11
	52	40	0,6	164	**IR45×52×40-XL**	0	–11
	55	22	1	129	**IR45×55×22-XL**	0	–11
50	55	25	0,6	78	**IR50×55×25-XL**	0	–11
	55	35	0,6	112	**IR50×55×35-XL**	0	–11
	58	22	0,6	115	**IR50×58×22-XL**	0	–11
	58	40	0,6	208	**IR50×58×40-XL**	0	–11
	60	25	1	162	**IR50×60×25-XL**	0	–11
	60	28	1,1	181	**IR50×60×28-XL**	0	–11
55	60	25	0,6	85,5	**IR55×60×25-XL**	–10	–21
	60	35	0,6	121	**IR55×60×35-XL**	–10	–21
	63	25	1	141	**IR55×63×25-XL**	–10	–21
	63	45	1	256	**IR55×63×45-XL**	–10	–21
	65	28	1,1	198	**IR55×65×28-XL**	–10	–21
60	68	25	1	152	**IR60×68×25-XL**	–10	–21
	68	35	0,6	213	**IR60×68×35-XL**	–10	–21
	68	45	1	276	**IR60×68×45-XL**	–10	–21
	70	25	1	195	**IR60×70×25-XL**	–10	–21
	70	28	1,1	215	**IR60×70×28-XL**	–10	–21
65	72	25	1	141	**IR65×72×25-XL**	–10	–21
	72	45	1	259	**IR65×72×45-XL**	–10	–21
	73	25	1	164	**IR65×73×25-XL**	–10	–21
	73	35	1	231	**IR65×73×35-XL**	–10	–21
	75	28	1,1	229	**IR65×75×28-XL**	–10	–21
70	80	25	1	221	**IR70×80×25-XL**	–10	–26
	80	30	1	267	**IR70×80×30-XL**	–10	–26
	80	35	1	312	**IR70×80×35-XL**	–10	–26
	80	54	1	488	**IR70×80×54-XL**	–10	–26

medias *https://www.schaeffler.de/std/1F9A*

Inner rings

Without lubrication hole

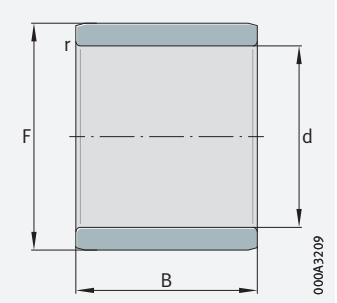

IR

d = 75 – 600 mm

Main dimensions				Mass	Designation ➤ *1005* | *3.5* ➤ *1006* | *3.6* X-life ➤ *1003*	Deviations for raceway F	
d	F	B	r	m		upper	lower
			min.	≈ g		µm	µm
75	85	25	1	238	**IR75×85×25-XL**	–4	–17
	85	30	1	287	**IR75×85×30-XL**	–4	–17
	85	35	1	336	**IR75×85×35-XL**	–4	–17
	85	54	1	520	**IR75×85×54-XL**	–4	–17
80	90	25	1	253	**IR80×90×25-XL**	–4	–17
	90	30	1	304	**IR80×90×30-XL**	–4	–17
	90	35	1	355	**IR80×90×35-XL**	–4	–17
	90	54	1	556	**IR80×90×54-XL**	–4	–17
85	95	26	1	277	**IR85×95×26-XL**	–14	–27
	95	36	1	388	**IR85×95×36-XL**	–14	–27
	100	35	1,1	582	**IR85×100×35-XL**	–14	–27
	100	63	1,1	1 054	**IR85×100×63-XL**	–14	–27
90	100	26	1	294	**IR90×100×26-XL**	–14	–27
	100	30	1	340	**IR90×100×30-XL**	–14	–27
	100	36	1	406	**IR90×100×36-XL**	–14	–27
	105	35	1,1	610	**IR90×105×35-XL**	–14	–27
	105	63	1,1	1 110	**IR90×105×63-XL**	–14	–27
95	105	26	1	313	**IR95×105×26-XL**	–14	–27
	105	36	1	431	**IR95×105×36-XL**	–14	–27
	110	35	1,1	657	**IR95×110×35-XL**	–14	–27
	110	63	1,1	1 170	**IR95×110×63-XL**	–14	–27
100	110	30	1,1	350	**IR100×110×30-XL**	–14	–27
	110	40	1,1	505	**IR100×110×40-XL**	–14	–27
	115	40	1,1	797	**IR100×115×40-XL**	–14	–27
110	120	30	1	409	**IR110×120×30-XL**	–14	–32
	125	40	1,1	840	**IR110×125×40-XL**	–7	–22
120	130	30	1	442	**IR120×130×30-XL**	–7	–22
	135	45	1,1	1 044	**IR120×135×45-XL**	–7	–22
130	145	35	1,1	855	**IR130×145×35-XL**	–17	–37
	150	50	1,5	1 690	**IR130×150×50-XL**	–17	–37
140	155	35	1,1	917	**IR140×155×35-XL**	–17	–37
	160	50	1,5	1 800	**IR140×160×50-XL**	–17	–37

medias *https://www.schaeffler.de/std/1F9A*

Main dimensions				Mass	Designation ➤*1005*|*3.5* ➤*1006*|*3.6* X-life ➤*1003*	Deviations for raceway F	
d	F	B	r min.	m ≈ g		upper µm	lower µm
150	165	40	1,1	1 122	**IR150×165×40-XL**	–27	–52
160	175	40	1,1	1 200	**IR160×175×40-XL**	–27	–52
170	185	45	1,1	1 441	**IR170×185×45-XL**	–25	–46
180	195	45	1,1	1 510	**IR180×195×45-XL**	–25	–46
190	210	50	1,5	2 410	**IR190×210×50-XL**	–40	–66
200	220	50	1,5	2 518	**IR200×220×50-XL**	–40	–66
220	240	50	1,5	2 753	**IR220×240×50-XL**	–55	–86
240	265	60	2	4 600	**IR240×265×60-XL**	–55	–86
260	285	60	2	4 980	**IR260×285×60-XL**	–69	–107
280	305	69	2	6 100	**IR280×305×69-XL**	–69	–107
300	330	80	2,1	9 200	**IR300×330×80-XL**	–69	–107
320	350	80	2,1	9 800	**IR320×350×80-XL**	–83	–127
340	370	80	2,1	10 200	**IR340×370×80-XL**	–83	–127
360	390	80	2,1	10 900	**IR360×390×80-XL**	–128	–182
380	415	100	2,1	16 700	**IR380×415×100-XL**	–122	–172

medias *https://www.schaeffler.de/std/1F9A*

Inner rings

With lubrication hole

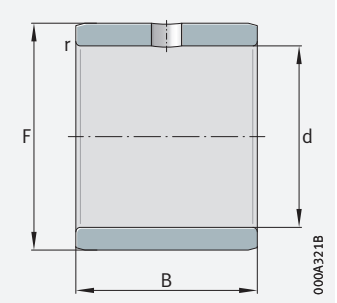

IR..-IS1

d = 6 – 50 mm

Main dimensions				Mass	Designation ➤*1005*|*3.5* ➤*1006*|*3.6* X-life ➤*1003*	Deviations for raceway F	
d	F	B	r	m		upper	lower
			min.	≈ g		µm	µm
6	10	10	0,3	3,7	**IR6×10×10-IS1-XL**	–7	–23
8	12	10	0,3	4,8	**IR8×12×10-IS1-XL**	–4	–18
10	14	12	0,3	7,3	**IR10×14×12-IS1-XL**	–4	–18
12	16	12	0,3	7,9	**IR12×16×12-IS1-XL**	–4	–18
15	20	12	0,3	12,2	**IR15×20×12-IS1-XL**	0	–12
20	25	16	0,3	24	**IR20×25×16-IS1-XL**	0	–12
25	30	16	0,3	25,7	**IR25×30×16-IS1-XL**	0	–12
30	38	20	0,6	77	**IR30×38×20-IS1-XL**	+5	–4
35	42	20	0,6	63,9	**IR35×42×20-IS1-XL**	0	–9
40	50	20	1	106	**IR40×50×20-IS1-XL**	0	–9
45	55	20	1	117	**IR45×55×20-IS1-XL**	0	–11
50	55	20	0,6	62,5	**IR50×55×20-IS1-XL**	0	–11
	60	20	1	128	**IR50×60×20-IS1-XL**	0	–11

medias *https://www.schaeffler.de/std/1F9A*

Drawn cup roller clutches



1 Drawn cup roller clutches 1018

1.1 Product design 1018
1.2 Load carrying capacity 1020
1.3 Compensation of angular misalignments 1022
1.4 Lubrication 1022
1.5 Sealing 1022
1.6 Speeds 1023
1.7 Noise 1023

1.8 Temperature range *1023*
1.9 Cages *1023*
1.10 Internal clearance *1023*
1.11 Dimensions, tolerances *1024*
1.12 Suffixes *1024*
1.13 Structure of the product designation *1024*
1.14 Dimensioning *1024*
1.15 Design of the adjacent construction *1025*
1.16 Mounting and dismounting *1029*
1.17 Legal notice regarding data freshness *1030*
Product tables *1031*
Drawn cup roller clutches without bearing arrangement *1031*
Drawn cup roller clutches with bearing arrangement *1032*

1 Drawn cup roller clutches

Drawn cup roller clutches:
- are one-way clutches, which transmit torques in one direction ➤*1018*|🗀*1*
- are available with or without an integrated bearing arrangement ➤*1019*|🗀*2*, ➤*1020*|🗀*3* and ➤*1020*|🗀*4*
- give very precise indexing
- allow high indexing frequencies
- have a low overrunning frictional torque
- are available with or without greasing
- are particularly compact in a radial direction and therefore permit extremely compact designs
- are suitable for housing materials made from steel, light metal or plastic
- can be combined with drawn cup needle roller bearings with open ends HK and drawn cup needle roller bearings with closed end BK
- have an extensive range of applications, for example as indexing clutches, back-stopping clutches and overrunning clutches ➤*1018*|🗀*1*

🗀**1**
Drawn cup roller clutches in tandem arrangement in an indexing system

① *Stationary component*
② *Component performs a swivel motion*
③ *Component performs a gradual rotational motion*

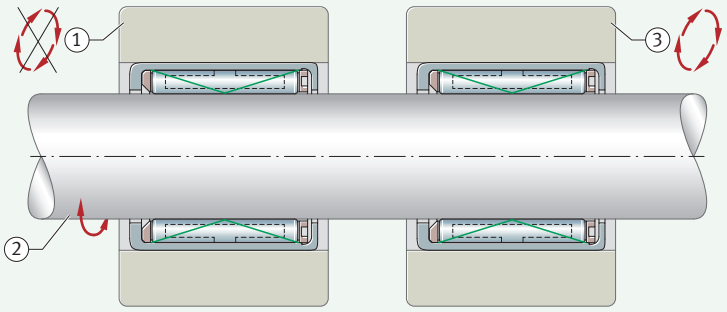

1.1 Product design

✎ *Design variants*

Drawn cup roller clutches are available:
- without bearing arrangement ➤*1019*|🗀*2*
- with bearing arrangement (rolling or plain bearing) ➤*1020*|🗀*3* and ➤*1020*|🗀*4*

Drawn cup roller clutches

✎ *Drawn cup roller clutches are one-way clutches*

These drawn cup roller clutches comprise thin-walled, drawn outer cups with a series of ramps on the inside diameter, plastic cages and needle rollers, which serve as clamping elements. Steel or plastic springs hold the needle rollers in their clamped position. Drawn cup roller clutches can transmit high torques in one direction and are particularly compact in a radial direction. The roller clutches are available with and without support bearing arrangements.

Suitable for applications with high indexing frequencies

Drawn cup roller clutches give very precise indexing, since the individual spring loading of the needle rollers ensures continuous contact between the shaft, needle rollers and ramps. They allow high indexing frequencies due to their low mass and the resulting low moment of inertia of the clamping elements. They also have a low overrunning frictional torque.

Preferred areas of application

Drawn cup roller clutches can be used in various applications such as indexing clutches, back-stopping clutches and overrunning clutches. In these cases, the drawn cup roller clutch performs an overrunning or locking function.

Drawn cup roller clutches should not be used if a malfunction could lead to personal injury. New applications, especially those involving extreme conditions, should first be verified by tests. Correct functioning can only be guaranteed if the concentricity error between the support bearing and the shaft can be kept to a low value.

Drawn cup roller clutches without bearing arrangement

Suitable for supporting torques only

Roller clutches HF do not have a bearing arrangement, i. e. they transmit torques only and, as a result, are unable to support any radial forces ➤*1019*|*2*. In the case of these roller clutches, concentricity to the shaft axis must be secured by additional rolling bearings or drawn cup roller clutches with a bearing arrangement must be used. The drawn cup roller clutches are available with and without knurling.

Drawn cup roller clutches without knurling

Drawn cup roller clutches without knurling are available with steel or plastic pressure springs ➤*1019*|*2*. Bearings with plastic springs have the suffix KF ➤*1024*|*1.12*.

Drawn cup roller clutches with knurling

For improved torque transmission in plastic housings, drawn cup roller clutches are available with a knurled outside surface. These drawn cup roller clutches have the suffix R ➤*1024*|*1.12*. The knurling can be applied to part of the drawn cup or over its entire length. The drawn cup roller clutches are also available with steel or plastic pressure springs. Roller clutches with plastic springs have the suffix KF ➤*1024*|*1.12*.

2

Drawn cup roller clutches without bearing arrangement, with and without knurling

① *Without knurling*
② *With knurling*

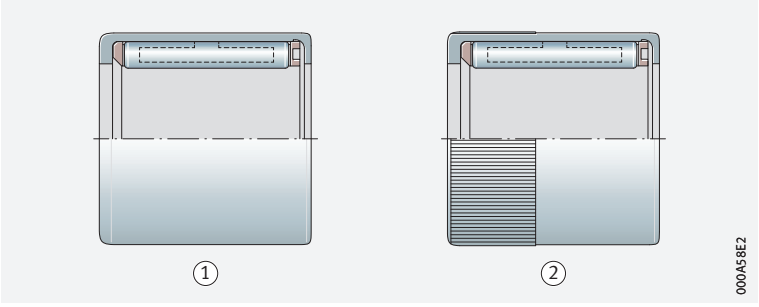

Drawn cup roller clutches with bearing arrangement

Also suitable for supporting radial forces

Due to the integrated plain or rolling bearing, roller clutches HFL can also support radial forces in addition to torques ➤*1020*|*3* and ➤*1020*|*4*. The drawn cup roller clutches are available with and without knurling.

Drawn cup roller clutches without knurling

Drawn cup roller clutches without knurling are available with steel or plastic pressure springs ➤*1020*|*3* and ➤*1020*|*4*. Drawn cup roller clutches with plastic springs have the suffix KF ➤*1024*|*1.12*.

Drawn cup roller clutches with knurling

For improved torque transmission in plastic housings, drawn cup roller clutches are available with a knurled outside surface. These drawn cup roller clutches have the suffix R ➤*1024*|*1.12*. The knurling can be applied to part of the drawn cup or over its entire length. These drawn cup roller clutches are also available with steel or plastic pressure springs. Roller clutches with plastic springs have the suffix KF ➤*1024*|*1.12*.

3
Drawn cup roller clutches with plain bearing arrangement, with and without knurling

F_r = *radial load*

① *Without knurling*
② *With knurling*
③ *Plain bearing*

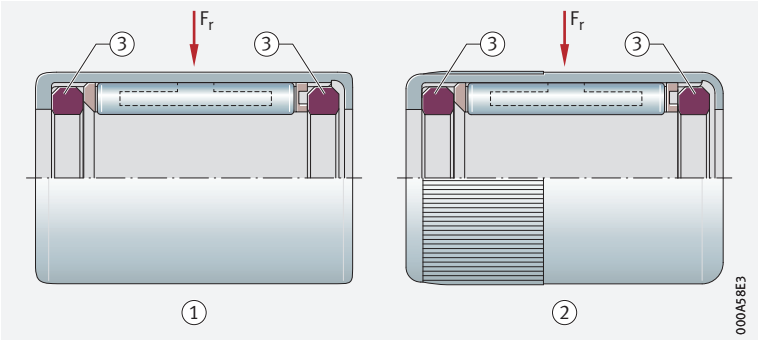

4
Drawn cup roller clutch with rolling bearing arrangement, without knurling

F_r = *radial load*

① *Rolling bearing*

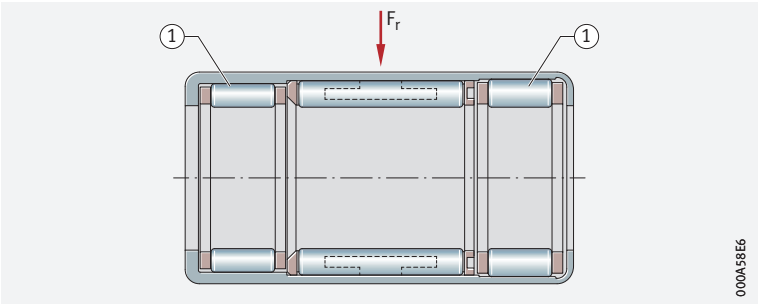

Clamping direction of the drawn cup roller clutch

An arrow on the end face of the drawn cup indicates the clamping direction of the drawn cup roller clutch. The roller clutch clamps when the drawn cup is rotated in the direction of the arrow.

1.2 Load carrying capacity

Roller clutches with a support bearing arrangement accommodate radial forces

Depending on the design (with or without bearing arrangement), drawn cup roller clutches can either transmit torques only or additional radial loads ➤*1018|1.1*, ➤*1020|3* and ➤*1020|4*.
For roller clutches without bearing arrangement, radial forces must be supported by additional bearings.

Transmissible torque

The rigidity of the housing determines the transmissible torque

Transmission of torque requires a rigid housing. The transmissible torque is therefore dependent on the shaft and housing material, the shaft hardness, the wall thickness of the housing and the shaft and housing tolerances. When calculating the torque, the maximum drive torque and the moment of inertia of the masses during acceleration must be taken into consideration.

Limiting load

Do not exceed the limiting load

In the case of drawn cup roller clutches with plain bearings, the product calculated from the actual speed n and radial load F_R must not exceed the value stated for the limiting load $(F_r \cdot n)_{max}$. The operating limits are determined by the limiting speeds stated in the product tables and the permissible radial load.

Indexing accuracy and indexing frequency

The roller clutch must not be overloaded

In order not to overload the clutch, the inertia of the entire system must be taken into consideration. The high indexing accuracy is due to the individual spring loading of the needle rollers, which ensures continuous contact between the shaft, needle rollers and clamping surface.
The indexing accuracy is influenced by the indexing frequency, lubrication, fitting tolerances, adjacent construction, elastic deformation of the adjacent parts and the drive method, either through the shaft or the housing. Optimum accuracy is achieved if the drive is via the shaft.

High indexing frequencies due to low mass

High indexing frequencies are due to the low mass and the resulting low moment of inertia of the clamping elements.

Frictional torque and frictional energy

For pattern of frictional torque ➤ *1021* | 5. The overrunning frictional energy at idle is dependent on whether the shaft or the outer ring is rotating ➤ *1021* | 6.

5
Overrunning frictional torque, as a function of shaft diameter

M_R = *overrunning frictional torque*
d = *shaft diameter*

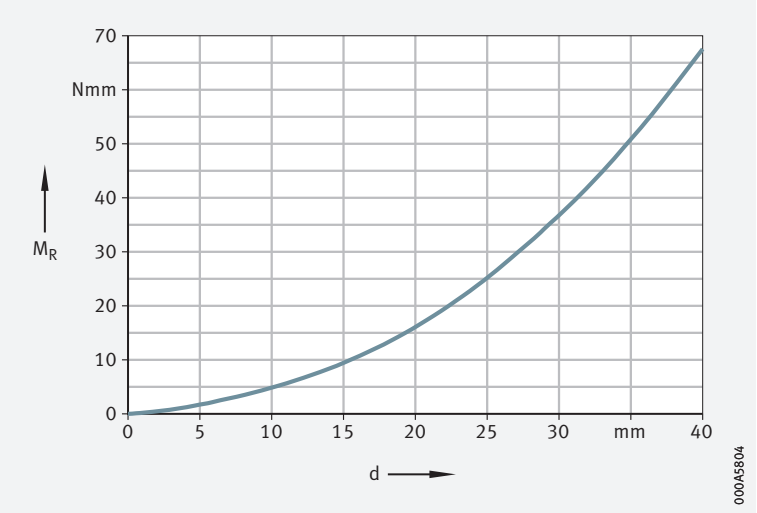

6
Overrunning frictional energy, as a function of speed

N_R = *overrunning frictional energy*
n = *speed*
n_{GA} = *limiting speed with rotating outer ring*
n_{GW} = *limiting speed with rotating shaft*

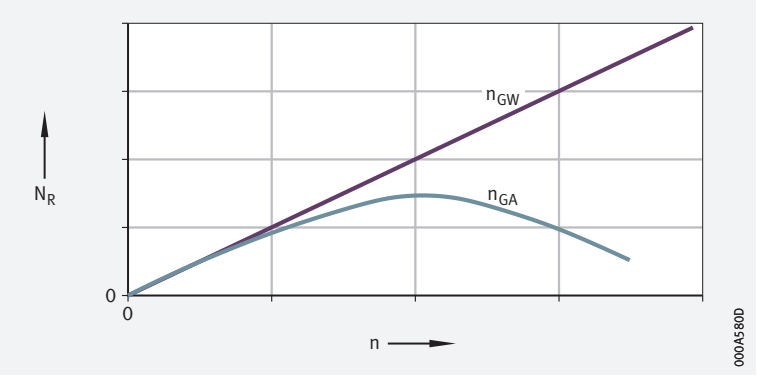

Rotating outer ring

Due to the centrifugal force, the needle rollers may lift off the shaft

If the outer ring rotates, the frictional energy increases with speed at first but then, due to the centrifugal force of the needle rollers, it decreases gradually towards zero. At this speed, there is no longer any frictional contact between the needle rollers and the shaft. Due to the increasing centrifugal force, the needle rollers lift off the shaft.

1.3 Compensation of angular misalignments

Concentricity is an essential precondition for correct functioning of the roller clutch. Correct functioning can only be guaranteed if the concentricity error between the support bearing and the shaft can be kept to a low value.

1.4 Lubrication

A grease to GA26 is used for initial greasing

The roller clutches are greased using a lithium soap grease to GA26. In many cases, the initial greasing is sufficient to last the operating life of the bearings. For applications with oil lubrication, roller clutches are available without greasing. These roller clutches are coated with a preservative. For general applications (mixed operation involving locking and overrunning), the Schaeffler initial greasing has proved effective. In order to ensure optimum function, it may be necessary to use different lubricants. The suitability of the lubricant must then be verified by means of tests.

For applications in which one operating condition (overrunning or locking) is heavily predominant, a special greasing should be used. In this case, please consult Schaeffler.

A grease operating life cannot be calculated

It is not possible to calculate the grease operating life or lubrication interval for drawn cup roller clutches. If relubrication is carried out, oil should used for lubrication or a changeover to oil lubrication should generally be made. At temperatures < -10 °C and speeds $> 0{,}7\ n_G$, recommendations on lubrication should be requested. At temperatures over +70 °C, oil lubrication should be used. The oil level should be such that, when the drawn cup roller clutch is stationary and the axis is horizontal, it is immersed approx. $^1/_3$ in the oil bath.

Suitable lubricating oils

Suitable oils are CL and CLP to DIN 51517 or HL and HLP to DIN 51524. Viscosity classes ➤*1022*|▦ *1*.

Compatibility with plastic cages

When using bearings with plastic cages, compatibility between the lubricant and the cage material must be ensured if synthetic oils, lubricating greases with a synthetic oil base or lubricants containing a high proportion of EP additives are used.

▦ **1**
Viscosity classes

Operating temperature °C		Viscosity class
from	to	
+15	+30	ISO VG 10
+15	+90	ISO VG 32
+60	+120	ISO VG 100

1.5 Sealing

Drawn cup roller clutches (with and without bearing arrangement) are supplied without seals. Contaminants (dust, dirt and moisture) can impair the function and operating life of roller clutches.

Sealing of the bearing position with sealing rings G or SD

Effective sealing elements for use in sealing open drawn cup roller clutches with a risk of contamination

If there is a risk of contamination, sealing rings of economical series G or SD should be fitted ➤*1036*. The sealing rings are designed as contact seals and are arranged in front of the roller clutch. They protect the bearing position reliably against contamination, spray water and excessive loss of grease. The sealing rings are matched to the small radial dimensions of the drawn cup roller clutches and can be combined with wider inner rings of series IR. They are very easy to fit, since they are simply pressed into the housing bore.

1.6 Speeds

✎ *Speeds in the product tables*

The limiting speeds n_{GW} and n_{GA} in the product tables are valid for oil and grease lubrication. The limiting speed n_{GW} is valid for a rotating shaft, while n_{GA} is valid for a rotating outer ring.

1.7 Noise

Schaeffler Noise Index

The Schaeffler Noise Index (SGI) is not yet available for this bearing type ➤*69*. The data for these bearing series will be introduced and updated in stages.

Further information:

- ***medias*** *https://medias.schaeffler.com*

1.8 Temperature range

Possible operating temperatures of drawn cup roller clutches ➤*1023*|▦*2*.

▦**2**
Permissible temperature ranges

Operating temperature	Drawn cup roller clutches
	–10 °C to +70 °C, limited by the lubricant

In the event of anticipated temperatures which lie outside the stated values, please contact Schaeffler.

1.9 Cages

Plastic cages are used in the guidance of rolling elements for roller clutches and for integrated support bearing arrangements supported by rolling elements.

1.10 Internal clearance

✎ *The enveloping circle diameter F_w applies instead of the radial internal clearance*

In the case of bearings without inner ring, the dimension for the enveloping circle diameter F_w is used instead of the radial internal clearance. The enveloping circle is the inner inscribed circle of the needle rollers in clearance-free contact with the outer raceway. In drawn cup roller clutches with a rolling bearing arrangement, the enveloping circle diameter F_w of the bearings once fitted (in the solid section ring gauge) is approximately in tolerance class F8. Upper and lower deviations of enveloping circle diameter for tolerance class F8 ➤*1023*|▦*3*.

▦**3**
Deviations of enveloping circle diameter for drawn cup roller clutches supported by rolling bearings

Enveloping circle diameter F_w mm		Tolerance class F8 Tolerance for enveloping circle diameter F_w	
		upper deviation	lower deviation
over	incl.	µm	µm
3	6	+28	+10
6	10	+35	+13
10	18	+43	+16
18	30	+53	+20
30	50	+64	+25

1.11 Dimensions, tolerances

Dimensions and tolerances of drawn cup roller clutches are not standardised. The thin-walled outer cups adopt the dimensional and geometrical accuracy of the housing bore.

1.12 Suffixes

Suffixes describe the design and features of a bearing in more detail.

4 Suffixes and corresponding descriptions

Suffix	Description of suffix	
–	Steel springs	Standard
KF	Plastic pressure springs	
R	Knurled outside surface	
RR	Drawn cup roller clutch with Corrotect coating	Special design, available by agreement

1.13 Structure of the product designation

With ***medias*** interchange, equivalent Schaeffler bearing designations can be determined for bearing designations from other rolling bearing manufacturers *https://www.schaeffler.de/std/1B69*.

Examples of composition of product designation

The designation of drawn cup roller clutches follows a set model. Examples ➤*1024*|*7* and ➤*1024*|*8*.

7 Drawn cup roller clutch without bearing arrangement, without knurling: designation structure

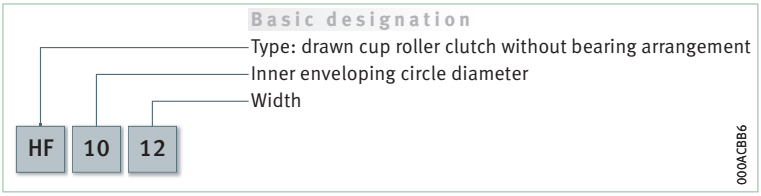

8 Drawn cup roller clutch with bearing arrangement, plastic pressure springs, with knurling: designation structure

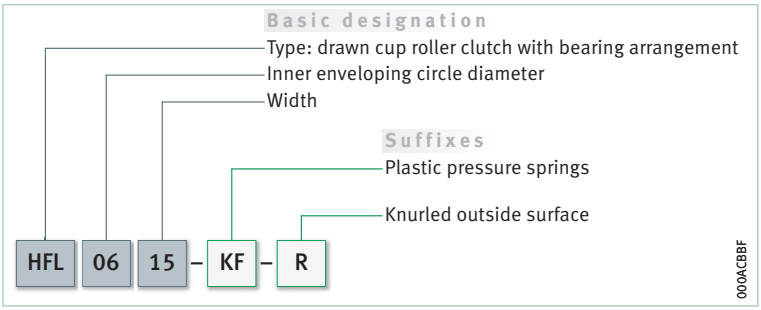

1.14 Dimensioning

The size is determined on the basis of the load carrying capacity of the drawn cup roller clutch relative to the loads and the requirements for rating life and operational reliability ➤*1025*|*1.15*.

1.15 Design of the adjacent construction

Design of housing bore

✎ *Support outer cup over entire circumference and width*

Suitable housing materials are steel, light metal or plastic. In order to allow full utilisation of the performance capability of drawn cup roller clutches and achieve the requisite rating life, sufficient rigid support must be provided for the outer cups in the housing. The support for the outer cup in the housing bore can be produced as a cylindrical seating surface. The seating surfaces for the outer cup and the raceway for the rolling elements or inner ring (if the bearing arrangement is not produced as a direct bearing arrangement) should not be interrupted by grooves, holes or other recesses. The accuracy of the mating parts must meet specific requirements, the bore tolerances for the housing bore (recommended tolerance classes) are dependent on the housing material ➤*1025*| *5* and ➤*1026*| *6*. The surface quality of the housing bore should be Ramax 0,8. The cylindricity tolerance of the housing bore in metal housings should be within the tolerance grade IT5/2.

Due to the thin-walled outside surface, the roller clutches only adopt their precise geometry once they have a tight fit. As a result, the accuracy of the locating bore essentially determines the geometrical accuracy of the drawn cup and thus the functioning of the clutch.

✎ *Provide lead chamfer on the housing bore*

For the drawn cup roller clutches to be mounted without damage, the housing bore must have a lead chamfer of 15°.

5 *Design of housing bore*

Series	Springs	Bore Housing material		
		Steel Cast iron	Light metal	Max. bore in plastic[2]
HF, HFL	Steel	N6 Ⓔ (N7 Ⓔ)[1]	R6 Ⓔ (R7 Ⓔ)[1]	–
HF..-KF, HFL..-KF	Plastic	N7 Ⓔ	R7 Ⓔ	–
HF..-R, HFL..-R	Steel	–	–	0 D –0,05
HF..-KF-R, HFL..-KF-R	Plastic	–	–	0 D –0,05
HFL0606-KF-R, HFL0806-KF-R	Plastic	–	–	0 D –0,05

1) *The values in brackets can be used if the actual torque is no more than 50% of the permissible torque $M_{d\ per}$ in accordance with the product table.*

2) *Guide values as a function of the plastic used. Outside diameter D* ➤*1031*|.

Minimum wall thickness for metal housings

Maximum transmissible torque

For metal housings, the maximum transmissible torque $M_{d\ per\ max}$ is determined as a function of the diameter ratio Q_A to ➤*1026*|*9* (steel housing) or to ➤*1027*|*10* (aluminium housing), see calculation examples.

Guide values for $Q_{A\ max}$ with steel and aluminium as housing materials ➤*1026*|*6*.

6
Guide values

Housing material	Diameter ratio $Q_{A\ max}$
Steel	0,8
Aluminium	0,6

The comparative stress σ_v must not exceed the yield stress of the housing material.

Steel housing

Calculation example

For drawn cup roller clutches HF0612, the maximum transmissible torque $M_{d\ per\ max}$ should be determined ➤*1026*|*9*:

Drawn cup roller clutch	HF0612
Housing	Steel
Housing bore tolerance	N6 Ⓔ ➤*1025*|*5*
Permissible housing stress ($R_{p0,2}$) σ_v	450 N/mm²
Diameter ratio Q_A of housing	0,9
Permissible torque $M_{d\ per}$	in accordance with product table

Calculation

$$M_{d\ per\ max} = 60\%\ M_{d\ per}$$
$$= 0{,}6 \cdot 1{,}76\ \text{Nm}$$
$$= 1{,}056\ \text{Nm}$$

9
Steel housing

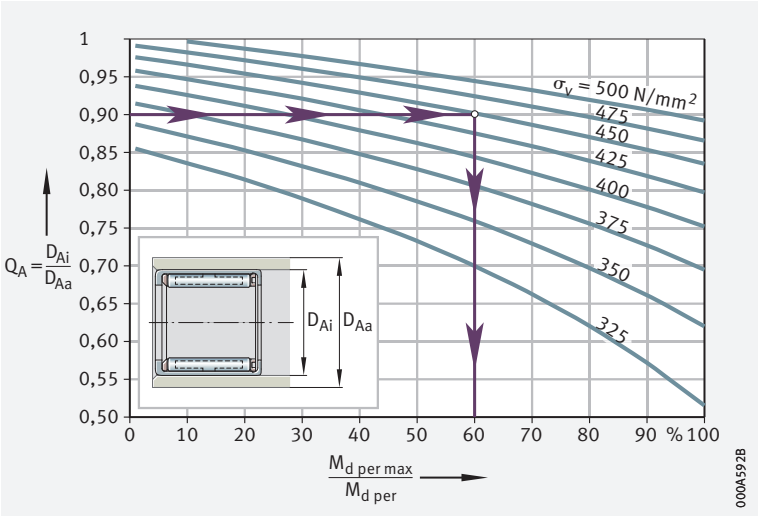

Modulus of elasticity
$E = 210\,000$ N/mm²

Q_A = *diameter ratio of housing*
D_{Ai} = *housing bore*
D_{Aa} = *housing outside diameter*
$M_{d\ per}$ = *permissible torque*
$M_{d\ per\ max}$ = *maximum transmissible torque*
σ_v = *comparative stress*

Aluminium housing

Calculation example

For drawn cup roller clutch HF1616, the diameter ratio Q_A of the housing should be determined ➤*1027*|*10*:

Drawn cup roller clutch	HF1616
Housing	Aluminium
Housing bore tolerance	R6 Ⓔ ➤*1025*|*5*
Permissible housing stress ($R_{p0,2}$) σ_v	250 N/mm²
Maximum transmissible torque $M_{d\ per\ max}$	10 Nm
Permissible torque $M_{d\ per}$	in accordance with product table
giving $M_{d\ per\ max}/M_{d\ per}$	50%

Calculation

$Q_A = D_{Ai}/D_{Aa} \leqq 0{,}7$

$D_{Aa} \geqq D_{Ai}/0{,}7 = 22\ mm/0{,}7$

$= 31{,}5\ mm$

10
Aluminium housing

Modulus of elasticity
E = 70 000 N/mm²

Q_A = *diameter ratio of housing*
D_{Ai} = *housing bore*
D_{Aa} = *housing outside diameter*
$M_{d\ per}$ = *permissible torque*
$M_{d\ per\ max}$ = *maximum transmissible torque*
σ_v = *comparative stress*

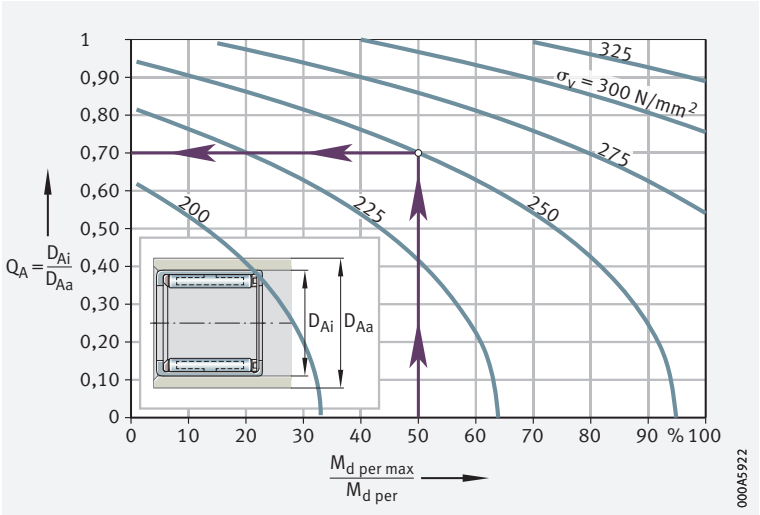

Minimum wall thickness for plastic housings

For plastic housings, drawn cup roller clutches with a partially or fully knurled outside surface should be used (suffix R).

The guide value for the minimum wall thickness of plastic housings is:

f 1

$$s_{min} \geqq D - F_w$$

Legend

s_{min}	mm	Minimum wall thickness
D	mm	Outside diameter of roller clutch
F_w	mm	Enveloping circle.

Axial location

A tight fit is usually sufficient for axial location

Drawn cup roller clutches give very easy mounting and permit simple adjacent constructions. The drawn cup roller clutches are pressed into the housing bore and require no further axial location.
The precondition for this is, however, that the specifications in accordance with ➤*1025*| ▦ *5* are observed.

Design of the shaft/raceway

Produce the raceway as a rolling bearing raceway

Drawn cup roller clutches HF/HFL are usually used without an inner ring. In order to guarantee correct functioning of the drawn cup roller clutches, the raceway for the rolling elements on the shaft must be produced as a rolling bearing raceway (hardened and ground). The surface hardness of the raceways must be 670 HV to 840 HV, the case hardening depth CHD must be sufficiently large (CHD ≧ 0,3 mm). Design of raceways ➤*1028*| ▦ *7*. If the shaft cannot be produced as a raceway, the bearings can be combined with inner rings IR or LR.

Provide lead chamfer on the shaft

For the bearings to be mounted without damage, the shaft must have a lead chamfer of 10° to 15° with a width of approx. 1 mm.

▦ *7*
Design of shaft

Series	Springs	Shaft			
		Tolerance class[1]	Roundness tolerance max.	Parallelism tolerance max.	Recommended mean roughness value Ramax (Rzmax) µm
HF, HFL	Steel	h5 (h6)[2]	IT3	IT3	0,4 (2)
HF..-KF, HFL..-KF	Plastic	h8			
HF..-R, HFL..-R	Steel	h5 (h6)[2]			
HF..-KF-R, HFL..-KF-R	Plastic	h8			
HFL0606-KF-R, HFL0806-KF-R	Plastic	h9			

1) *The envelope requirement Ⓔ applies.*

2) *The values in brackets can be used if the actual torque is no more than 50% of the permissible torque $M_{d\,per}$.*

1.16 Mounting and dismounting

Protect drawn cup roller clutches against dust, dirt and moisture; contaminants can impair the function and operating life of roller clutches. Pressing-in forces must never be directed through the rolling elements. Drawn cup roller clutches must not be tilted during pressing-in, as this may damage the needle rollers and raceways.

Retention for transport

Drawn cup roller clutches are normally packed individually in the case of small quantities. Where larger quantities are involved, drawn cup roller clutches are placed in a specific orientation in blister packaging and delivered in this form. The blister packaging then serves to retain the parts in position during transport.

Removing the drawn cup roller clutches from the packaging

Drawn cup roller clutches should only be removed from their original packaging immediately before assembly. If roller clutches are removed from a batch packaged with dry preservative, the package must be closed again immediately. The protective vapour phase can be maintained only in the closed package. Ungreased drawn cup roller clutches are coated with a preservative. Lubrication with oil must take place after pressing-in, in accordance with the specifications.

Storage

Drawn cup roller clutches should be stored:

- in dry, clean rooms with the room temperature as constant as possible
- at a relative humidity of max. 65%

Storage period

The storage period for greased drawn cup roller clutches is limited by the shelf life of the lubricating grease.

Mounting using a fitting mandrel

Drawn cup roller clutches should only be pressed into the locating bore using a special fitting mandrel ➤*908*. Attention must be paid to the clamping direction of the roller clutch. The clamping direction is indicated by an arrow on the end face of the drawn cup.

The drawn cup roller clutch clamps if it is rotated in the direction of the arrow.

Functional inspection

Clutches without knurling

The function of these roller clutches is checked in a housing with the minimum wall thickness determined according to ➤*1026* | *9* or thicker. The housing bore and shaft tolerances must be observed ➤*1025* | *5* and ➤*1028* | *7*.

Clutches with knurling

The function of these clutches is checked before they are pressed in. In this case, the inspection criteria are the clamping effect and idling.

For any questions relating to the mounting of drawn cup roller clutches, please consult Schaeffler.

Schaeffler Mounting Handbook

Drawn cup roller clutches must be handled with great care

In order that drawn cup roller clutches can function correctly and achieve the envisaged operating life without detrimental effect, they must be handled with care.

The Schaeffler Mounting Handbook MH 1 gives comprehensive information about the correct storage, mounting, dismounting and maintenance of rotary rolling bearings *https://www.schaeffler.de/std/1D53*. It also provides information which should be observed by the designer, in relation to the mounting, dismounting and maintenance of bearings, in the original design of the bearing position. This book is available from Schaeffler on request.

1.17 Legal notice regarding data freshness

✎ The further development of products may also result in technical changes to catalogue products

Of central interest to Schaeffler is the further development and optimisation of its products and the satisfaction of its customers. In order that you, as the customer, can keep yourself optimally informed about the progress that is being made here and with regard to the current technical status of the products, we publish any product changes which differ from the printed version in our electronic product catalogue.

§ We therefore reserve the right to make changes to the data and illustrations in this catalogue. This catalogue reflects the status at the time of printing. More recent publications released by us (as printed or digital media) will automatically precede this catalogue if they involve the same subject. Therefore, please always use our electronic product catalogue to check whether more up-to-date information or modification notices exist for your desired product.

Link to electronic product catalogue

The following link will take you to the Schaeffler electronic product catalogue: *https://medias.schaeffler.com*.

Drawn cup roller clutches

Without bearing arrangement
With or without knurling

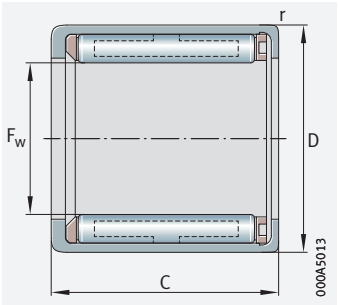

HF, HF..-KF
Without knurling

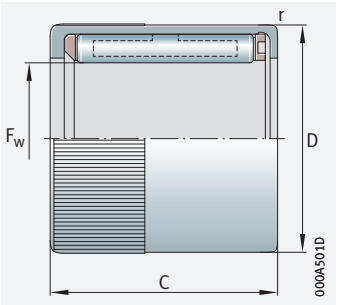

HF..-R, HF..-KF-R
With knurling

F_w = 3 – 35 mm

Main dimensions				Permissible torque	Limiting speeds		Mass	Designation ➤*1024|1.12* ➤*1024|1.13*		Suitable drawn cup needle roller bearings for radial support
								Drawn cup roller clutch with		
F_w	D	C –0,3	r min.	$M_{d\ per}$ Nm	n_{GW}[1] min^{-1}	n_{GA}[2] min^{-1}	m ≈ g	plastic springs	steel springs	
3	6,5	6	0,3	0,18	45 000	8 000	1	**HF0306-KF**	–	HK0306-TV
	6,5	6	0,3	0,06	45 000	8 000	1	**HF0306-KF-R**	–	HK0306-TV
4	8	6	0,3	0,34	34 000	8 000	1	**HF0406-KF**	–	HK0408
	8	6	0,3	0,1	34 000	8 000	1	**HF0406-KF-R**	–	HK0408
6	10	12	0,3	1,76	23 000	13 000	3	**HF0612-KF**	**HF0612**	HK0608
	10	12	0,3	0,6	23 000	13 000	3	**HF0612-KF-R**	**HF0612-R**	HK0608
8	12	12	0,3	3,15	17 000	12 000	3,5	**HF0812-KF**	**HF0812**	HK0808
	12	12	0,3	1	17 000	12 000	3,5	**HF0812-KF-R**	**HF0812-R**	HK0808
10	14	12	0,3	5,3	14 000	11 000	4	**HF1012-KF**	**HF1012**	HK1010
12	18	16	0,3	12,2	11 000	8 000	11	–	**HF1216**	HK1212
14	20	16	0,3	17,3	9 500	8 000	13	–	**HF1416**	HK1412
16	22	16	0,3	20,5	8 500	7 500	14	–	**HF1616**	HK1612
18	24	16	0,3	24,1	7 500	7 500	16	–	**HF1816**	HK1812
20	26	16	0,3	28,5	7 000	6 500	17	–	**HF2016**	HK2010
25	32	20	0,3	66	5 500	5 500	30	–	**HF2520**	HK2512
30	37	20	0,3	90	4 500	4 500	36	–	**HF3020**	HK3012
35	42	20	0,3	121	3 900	3 900	40	–	**HF3520**	HK3512

medias *https://www.schaeffler.de/std/1F9A*

[1] Limiting speed for rotating shaft.

[2] Limiting speed for rotating outer ring.

Drawn cup roller clutches

With bearing arrangement
With or without knurling

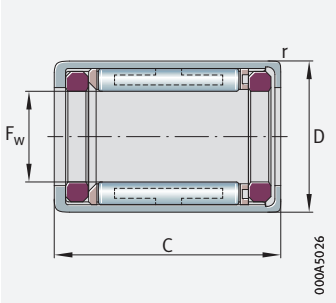

HFL, HFL..-KF, plain bearing arrangement (HFL0308-KF, HFL0408-KF, HFL0615-KF, HFL0615)

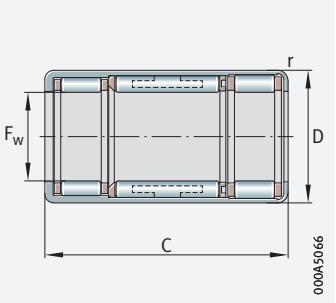

HFL, HFL..-KF, rolling bearing arrangement ($F_w \geqq 8$ mm and $C \geqq 22$ mm), HFL0822-KF-R, HFL0822-R

F_w = 3 – 35 mm

Main dimensions				Basic load ratings[1]		Fatigue limit load	Permissible torque	Limiting speeds		Mass
F_w	D	C	r	dyn. C_r	stat. C_{0r}	C_{ur}	$M_{d\,per}$	n_{GW}[3]	n_{GA}[4]	m
		–0,3	min.	N	N	N	Nm	min^{-1}	min^{-1}	≈ g
3	6,5	8	0,3	–	–	–	0,18	45 000	8 000	1,4
	6,5	8	0,3	–	–	–	0,06	45 000	8 000	1,4
4	8	8	0,3	–	–	–	0,34	34 000	8 000	1,6
	8	8	0,3	–	–	–	0,1	34 000	8 000	1,6
6	10	6	0,3	–	–	–	0,5	23 000	13 000	1
	10	15	0,3	–	–	–	1,76	23 000	13 000	4
	10	15	0,3	–	–	–	0,6	23 000	13 000	4
8	12	6	0,3	–	–	–	0,7	17 000	12 000	2
	12	22	0,3	3 650	3 950	560	3,15	17 000	12 000	7
	12	22	0,3	3 650	3 950	560	1	17 000	12 000	7
10	14	22	0,3	3 950	4 500	640	5,3	14 000	11 000	8
12	18	26	0,3	6 300	6 700	930	12,2	11 000	8 000	18
14	20	26	0,3	6 800	7 800	1 100	17,3	9 500	8 000	20
16	22	26	0,3	7 400	9 000	1 270	20,5	8 500	7 500	22
18	24	26	0,3	8 000	10 200	1 440	24,1	7 500	7 500	25
20	26	26	0,3	8 500	11 400	1 610	28,5	7 000	6 500	27
25	32	30	0,3	10 600	14 000	1 930	66	5 500	5 500	44
30	37	30	0,3	11 600	16 900	2 330	90	4 500	4 500	51
35	42	30	0,3	12 200	18 800	2 600	121	3 900	3 900	58

medias *https://www.schaeffler.de/std/1F9A*

1) Drawn cup roller clutches with rolling bearing arrangement.

2) Drawn cup roller clutches with plain bearing arrangement: during operation, the product calculated from the actual speed n and radial load F_r must not exceed the value stated for the limiting load $(F_r \cdot n)_{max}$. The operating limits are determined by the limiting speeds stated and the permissible radial load.

3) Limiting speed for rotating shaft.

4) Limiting speed for rotating outer ring.

5) No arrow on end face.

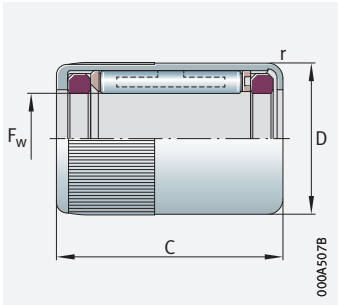

HFL0308-KF-R, HFL0408-KF-R, HFL0615-R, HFL0615-KF-R, plain bearing arrangement, with knurling

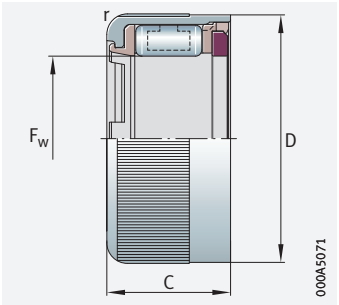

HFL0606-KF-R[5], HFL0806-KF-R[5], plain bearing arrangement, with knurling

	Designation ➤*1024|1.12* ➤*1024|1.13*		Permissible radial load[2]	Limiting load $(F_r \cdot n)_{max}$[2]
F_w	Drawn cup roller clutch with		$F_{r\,max}$	
	plastic springs	steel springs	N	N/min
3	**HFL0308-KF**	–	60	16 000
	HFL0308-KF-R	–	60	16 000
4	**HFL0408-KF**	–	80	16 000
	HFL0408-KF-R	–	80	16 000
6	**HFL0606-KF-R**	–	40	4 200
	HFL0615-KF	**HFL0615**	110	18 000
	HFL0615-KF-R	**HFL0615-R**	110	18 000
8	**HFL0806-KF-R**	–	54	4 200
	HFL0822-KF	**HFL0822**	–	–
	HFL0822-KF-R	**HFL0822-R**	–	–
10	–	**HFL1022**	–	–
12	–	**HFL1226**	–	–
14	–	**HFL1426**	–	–
16	–	**HFL1626**	–	–
18	–	**HFL1826**	–	–
20	–	**HFL2026**	–	–
25	–	**HFL2530**	–	–
30	–	**HFL3030**	–	–
35	–	**HFL3530**	–	–

Sealing rings



1 Sealing rings 1036

1.1 Product design 1036
1.2 Lubrication 1041
1.3 Temperature range 1041
1.4 Suffixes 1042
1.5 Structure of the product designation 1042

1.6 Design of bearing arrangements ____ *1042*
1.7 Mounting and dismounting ____ *1043*
1.8 Legal notice regarding data freshness ____ *1045*

Product tables
Sealing rings ____ *1046*

1 Sealing rings

The sealing rings:

- are of a single lip or double lip design ➤*1037*|🗀*2*, ➤*1037*|🗀*3*, ➤*1038*|🗀*4*
- are used as contact type sealing elements for sealing of the bearing position in the adjacent construction ➤*1036*|🗀*1*
- are also suitable as wipers where purely axial motion is present
- protect the bearings against contamination, spray water and the loss of grease
- are resistant to undoped lubricants with a mineral oil base
- allow circumferential speeds at the seal lip of up to 10 m/s, depending on the surface quality of the shaft
- are matched to the radial dimensions of Schaeffler drawn cup needle roller bearings and needle roller bearings ➤*1036*|🗀*1*
- are easy to fit, since they are simply pressed into the housing bore

🗀**1**
Sealing of the bearing position by a Schaeffler sealing ring

① *Single lip sealing ring G*
② *Needle roller bearing NK*
③ *Inner ring LR*

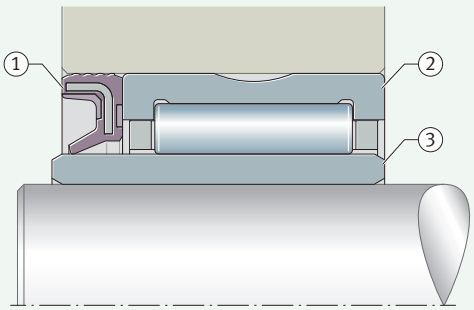

1.1 Product design

✎*Design variants*

Sealing rings are available as:

- a single lip variant (sealing ring GR and G) ➤*1037*|🗀*2* and ➤*1037*|🗀*3*
- a double lip design (sealing ring SD) ➤*1038*|🗀*4*

✎*Sealing of the bearing position has a decisive influence on the function and operating life of a bearing*

The quality of a bearing arrangement is decisively influenced by the components – shaft, housing, seal – that are directly adjacent to the bearing. Seals play a decisive role in protecting bearings against contamination. If inadequate seals are used, contaminants can penetrate the bearing or an unacceptably large quantity of lubricant may escape from the bearing. Solid contaminants lead to wear and/or fatigue of the raceways and rolling elements. Bearings that are contaminated or running dry will fail long before they reach their fatigue rating life. In the design of bearing arrangements, the use of the correct seals is therefore decisive in determining the operating life of the bearings and the cost-effectiveness of the bearing arrangement.

✎*Schaeffler sealing rings G, GR, SD*

Schaeffler sealing rings were developed as seals for needle roller bearings and have been available in the market for decades. During this time, they have proved extremely effective in automotive and engine construction as well as machine and equipment building.

Fundamental information on sealing rings and the principles of sealing ring technology as well as examples of applications are given in Technical Product Information TPI 128. This publication can be requested from Schaeffler.

Single lip sealing rings

With external steel reinforcement or rubber encased reinforcing ring

Single lip sealing rings are available in the designs GR and G ➤*1037*|⧉ *2*, ➤*1037*|⧉ *3* and ➤*1038*|▦ *1*. The sealing rings comprise a high quality synthetic NBR elastomer material, which is coloured green. Due to an active filler material, the sealing rings have particularly good resistance to wear and heat.

Sealing rings GR

Sealing rings GR suitable for shaft diameters up to 7 mm as standard and have external steel reinforcement for stiffening purposes ➤*1037*|⧉ *2* and ➤*1038*|▦ *1*.

Sealing rings G

Sealing rings G are designed for shaft diameters over 8 mm and have a rubber encased steel reinforcement with a rubber wave profile for stiffening purposes ➤*1037*|⧉ *3* and ➤*1038*|▦ *1*. This provides good sealing on the outside diameter. At the same time, it also reduces the forces required for fitting.

The angled reinforcing rings are made from formed sheet steel in accordance with DIN EN 10139.

⧉ *2*
Single lip sealing ring GR

① *Angled reinforcing ring*
② *Back surface (with marking)*
③ *Contact surface*
④ *Back face*
⑤ *End face*
⑥ *Seal edge*
⑦ *Seal lip*
⑧ *End surface*
⑨ *Outside surface*

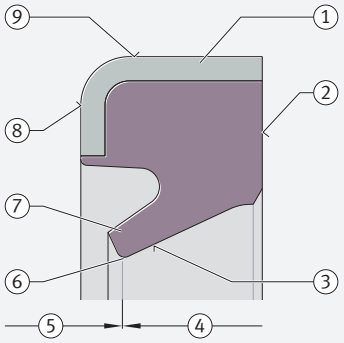

⧉ *3*
Single lip sealing ring G

① *Outside surface*
② *Rubber casing*
③ *Angled reinforcing ring*
④ *Back surface (with marking)*
⑤ *Contact surface*
⑥ *Back face*
⑦ *End face*
⑧ *Seal edge*
⑨ *Seal lip*
⑩ *Locating recess*
⑪ *End surface*

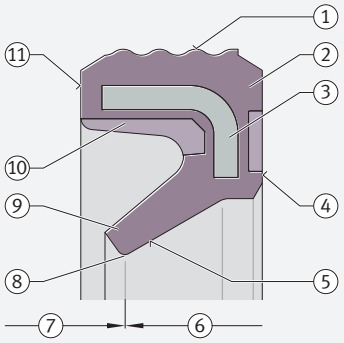

Double lip sealing rings

With contact lip and non-contact dust shield

Double lip sealing rings are available in the design SD ➤*1038*|⧉ *4* and ➤*1038*|▦ *1*:

- A contact seal lip essentially prevents the escape of lubricant and unpressurised oil from the bearing arrangement.
- A protective lip in contact with the shaft (marked side) also acts as a gap seal against the ingress of contamination

The space between the seal lip and protective lip must be filled with grease.

Carrier and lip area made from different materials

The sealing rings comprise two plastic components: the carrier is made from glass fibre reinforced polyamide PA66-GF, while the seal lip area is made from thermoplastic PU elastomer (coloured green).

Also suitable as wipers on shaft with axial motion

Sealing rings SD can also be used as wipers on shafts with axial motion. Since these sealing rings are made from a harder and stiffer lip material than the sealing rings G and also have an additional protective lip, they are particularly suitable for axial motions. Stroke velocities up to 3 m/s are possible, depending on the surface quality of the shaft.

4
Double lip sealing ring SD

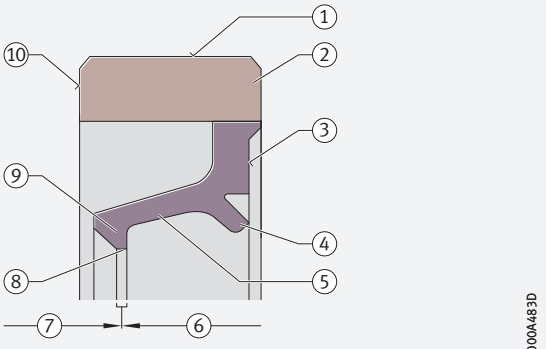

① *Outside surface*
② *Carrier*
③ *Back surface (with marking)*
④ *Protective lip*
⑤ *Membrane*
⑥ *Back face*
⑦ *End face*
⑧ *Seal contact surface*
⑨ *Seal lip*
⑩ *End surface*

1
Characteristics and areas of application of sealing rings

Criteria	Sealing ring		
	Single lip		Double lip
	GR	G	SD
Resistance			
Mineral oils and greases	Normally resistant	Normally resistant	Normally resistant
Highly blended, synthetic lubricants	Conditionally resistant	Conditionally resistant	Conditionally resistant
Aggressive media	Consultation necessary	Consultation necessary	Not resistant
Weather			
Light, air	Moderate	Moderate	Good
Humidity	Good	Good	Good
Contamination resistance (lip facing outwards)	Good	Good	Very good
Application: shaft			
Sealing integrity	Good	Good	Good
Maximum circumferential velocity	10 m/s	10 m/s	10 m/s
Application: rod			
Maximum stroke velocity	3 m/s	3 m/s	3 m/s
Application: housing			
Sealing integrity	Satisfactory	Very good	Good
Tight fit	Very good	Good	Good
Press-in force	Medium	Slight	High
Soft housing material	Conditionally suitable	Highly suitable	Suitable
High thermal expansion	Conditionally suitable	Suitable	Suitable
Split housing	Conditionally suitable	Suitable	Conditionally suitable

Operating behaviour

Normally used with rotating shaft

Sealing rings GR, G and SD are generally used in applications with a rotating shaft.

Static sealing of the housing bore

Sealing action is achieved by means of interference fit on the outside surface

The outside surface of the sealing rings gives static sealing of the housing bore. The sealing action is achieved when the sealing ring is pressed into the housing bore with an interference fit.

The firm seating and sealing action are decisively influenced:

- by the design and accuracy of the housing bore
- by the outside surface of the sealing ring
- by correct fitting of the sealing rings

Sealing rings G are suitable for fluid media

The rubber encased sealing rings G adapt particularly well to the surface of the housing bore. The application and usage for sealing against fluid media must be validated in each specific case.

Static/dynamic sealing of the shaft

The diameter of the seal lip in the fitted seal is smaller than the shaft diameter. As a result, the seal lip in the unfitted seal has interference of the radial force F_R (contact force). The radial force is the sum of all the component forces from the seal edge of the sealing ring that act towards the centre point of the shaft.

Factors influencing the contact force

It is dependent on:

- the deformation values of the seal lip – e.g. compression set, material hardness
- the geometry of the seal lip
- the operating temperature

Static sealing

With a stationary shaft, the seal integrity is primarily determined by the radial force.

Dynamic sealing

With a rotating shaft, the seal integrity is additionally influenced by:

- the surface of the shaft
- the geometrical and positional tolerances – e.g. coaxiality, runout, perpendicularity
- tribology – lubrication, friction, wear
- the speed
- the temperature
- contamination

Resistance and leakage

The sealing action is aided by a grease collar

The sealing rings are resistant to undoped lubricants with a mineral oil base. For other media, resistance must be checked. In leakage, the medium escapes from the area to be sealed, especially at the seal edge. Slight leakage cannot be completely prevented with contact seals due to the sealing mechanism (grease or fluid film) even if the sealing ring is fully functional. Leakage can occur in the form of gas or vapour, droplets or drops. In droplet or drop leakage, a thin film of fluid is formed on the shaft. The sealing action is aided by a grease collar.

Sealing on shaft with axial motion

The sealing ring performs a dual function as a wiper

With pure axial motion, the sealing ring acts as a wiper. As in the case of rotating shafts, it performs a dual function here. The sealing element:

- retains the lubricant in the area to be sealed
- prevents contaminants from penetrating the area to be sealed

The sealing action is dependent on the interference

The interference of the shaft/rod and seal lip diameter determines the sealing action. On the entry stroke of the rod, the sealing ring wipes away the lubricant and contaminant particles. The seal lip slides on the remaining lubricant film. On the counterstroke, lubricant is drawn out through the seal gap. This increases the lubricant film on the rod again.

Friction

Factors influencing the frictional torque

The friction is influenced by:

- the material pair (elastomer/steel)
- the surface of the shaft
- the interference (radial force F_R)
- the lubrication of the contact surface (shaft/seal edge or rod/seal edge)

With a rotating shaft or motion of the rod, the adhesive friction present during standstill is converted to sliding friction. If lubricant is supplied, mixed friction occurs. The frictional power of the sealing rings increases with the diameter and the speed of the shaft. When the shaft starts to move, the frictional torque is higher than in normal operation, especially after a long period of standstill. If there is a lack of lubricant, the seal lip is not lubricated. The displacement forces increase as a result of dry running. Furthermore, the seal lip is damaged.

Wear

Causes of wear

The following type of wear can occur at the seal edge:

- adhesive wear, e.g. if the seal lip sticks to the shaft after a long period of standstill
- if the seal edge slides on the contact surface
- under dry running
- if there are contaminant particles between the seal edge and the contact surface

The sealing function is impaired by deposits

After an extended running time, deposits may build up on the shaft/seal edge contact surface – e.g. comprising carbon and additive residues. These deposits can influence the sealing function and lead to leakage.

Wear grooves may occur on the shaft, especially if a soft shaft material is used or there is a heavy stream of contaminant particles.

Wear behaviour is influenced by the shaft material

The wear can be reduced by using a hardened shaft material or coated shafts. The abrasion resistance of NBR, FPM and HNBR elastomer is good, while that of TPU is very good.

Storage

Storage location

Sealing rings should be stored in dry, dust-free rooms – at a maximum relative humidity of 65%, moderate ventilation and free from draughts. Observe the storage room requirements in accordance with DIN 7716.

Protect sealing rings from:

- direct sunlight
- UV light
- ozone (e.g. produced by electrical equipment)
- intense thermal radiation

If these conditions are not maintained, this may cause unfavourable changes in the physical characteristics of the sealing rings (e.g. hardening).

Do not remove sealing rings from their original packaging until immediately before fitting.

Maximum storage time

The maximum storage time from manufacture to fitting is:

- 5 years for NBR
- 10 years for FPM/HNBR

Operating life

Factors influencing the operating life

Physical, chemical and mechanical influences determine the operating life of sealing rings.

These include:

- ageing; the elastomer structure may undergo thermo-oxidative degradation, further crosslinking or embrittlement, depending on the environment and medium
- medium; media (fluids) may be dispersed within the structure or dissolve elastomer components. The elastomer may swell or contract as a result. If several media are affecting the seal at the same time, volume changes can be superimposed on each other and may be difficult to detect by optical means
- temperature; high temperatures and/or aggressive media can accelerate the decomposition and ageing processes
- wear and contamination

Empirical values for operating life

The interaction of these influences is very complex. As a result, it is not possible to calculate the operating life of sealing rings; only values based on practical experience can be given. Under normal operating conditions, seals can achieve a maximum operating life of:

- 10 000 operating hours in continuous operation or 3 years to 5 years

The data given in ➤*1038*|▦ *1* are guide values. They cannot be applied without restriction to all operating conditions. In case of doubt, please consult Schaeffler.

1.2 Lubrication

The seal edge must always be lubricated

Sealing rings only function reliably if the seal edge is continually lubricated. Heat is generated at the seal edge. This is mainly dissipated to the shaft by the moving lubricant. Since elastomer gives only poor conduction of heat, heat cracks and wear can occur at the seal edge under inadequate lubrication. With grease lubrication, a grease collar protects the edge from excessive heating.

1.3 Temperature range

Excessively high temperatures can lead to loss of integrity at the seal edge

The permissible operating temperature is dependent on the interaction between the medium, the temperature and its effect on the sealing ring material ➤*1038*|▦ *1*. With increasing circumferential velocity, the temperature at the contact surface increases as a result of the increasing shear forces in the lubricant and the low thermal conductivity of the elastomer. If the temperature of the seal edge increases too much, wear and heat cracks may occur that impair the seal integrity.
The suitability of the sealing rings should be checked by tests as extremes of temperature are reached.

Possible operating temperatures of sealing rings ➤*1041*|▦ *2*.

▦ **2**
Permissible temperature ranges

Operating temperature	Sealing rings G and GR in standard design	Sealing rings SD
	–30 °C to +110 °C depending on the medium acting on the sealing ring	–30 °C to +100 °C depending on the medium acting on the sealing ring

In the event of anticipated temperatures which lie outside the stated values, please contact Schaeffler.

1.4 Suffixes

Suffixes describe the design and features of a bearing in more detail.

3 Suffixes and corresponding descriptions

Suffix	Description of suffix	
FPM	Sealing rings G and GR for temperatures of –20 °C to +160 °C or circumferential velocities of up to 16 m/s	Special design, available by agreement only
HNBR	Sealing rings G and GR for temperatures of –30 °C to +140 °C or circumferential velocities of up to 12 m/s	

1.5 Structure of the product designation

With ***medias*** interchange, equivalent Schaeffler bearing designations can be determined for bearing designations from other rolling bearing manufacturers *https://www.schaeffler.de/std/1B69*.

Example of composition of product designation

The designation of sealing rings follows a set model.
Example ➤*1042*| *5*.

5 Sealing ring G: designation structure

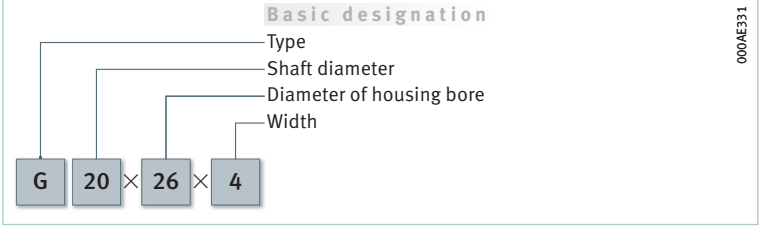

1.6 Design of bearing arrangements

Design of housing bore

The fit has a considerable influence on the seating of sealing rings

For a tight fit of the sealing rings in the housing bore, the values should be in accordance with ➤*1043*| *5*. If the housing and sealing ring materials have considerably different coefficients of thermal expansion, the tight fit of the sealing ring may change under hot or cold conditions.

Chamfers on the housing bore

The housing bore should be chamfered in order to protect the sealing ring during fitting ➤*1042*| *6* and ➤*1042*| *4*. The remaining seating length must be at least the nominal width of the sealing rings.

The design of the chamfer on the housing bore should be in accordance with the data in DIN 3760.

6 Chamfers on end of shaft and housing bore

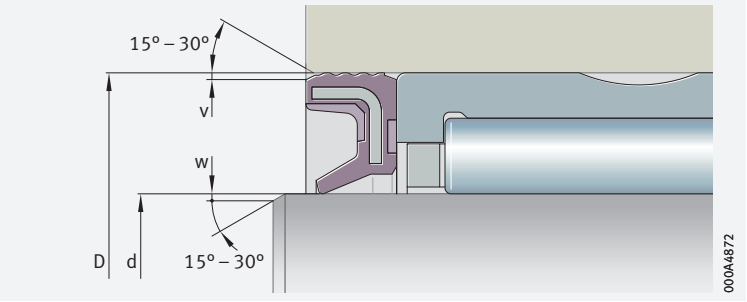

4 Chamfer dimensions

Chamfer	D ≦ 30 mm	D > 30 mm	d ≦ 30 mm	d > 30 mm
v_{min}	0,3	1% of D	–	–
w_{min}	–	–	0,3	0,5

Design of shaft

The surface hardness of the seal running surfaces should be ≧ 55 HRC

For a tight fit of the sealing rings on the shaft and seal running surfaces proven in practice, the values should be in accordance with ➤*1043*|▦ *5*. Where there are special requirements for sealing integrity, the values must be adjusted as necessary. Hard contaminant particles on the seal can
lead to wear of the seal running surface. For this reason, only materials with a hardness of ≧ 55 HRC can be recommended for use as a seal running surface ➤*1043*|▦ *5*. The steels normally used in machine building are suitable. The sliding surface for the seal lips must not have any surface imperfections in accordance with ISO 8785. The design of seal running surfaces in accordance with the requirements in DIN 3760 is recommended.

Hardened and ground bearing rings used as raceway

For bearing positions with heavy contamination impact, the use of hardened rings ground free from spiral marks – such as inner rings LR – as a raceway for the seal lip is advisable, since these can be replaced if wear occurs ➤*1043*|⧉ *7*.

If increased wear is expected, the running surface can be coated. In this case, please consult Schaeffler.

⧉ *7*
Ring hardened and ground free from spiral marks – inner ring LR

① *Single lip sealing ring G*
② *Needle roller bearing NK*
③ *Inner ring LR*

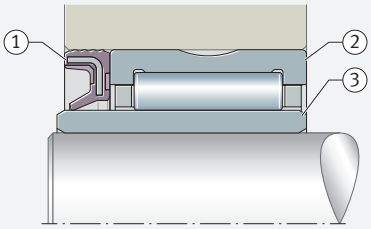

In order to protect the seal lips during fitting, the ends of shafts should be chamfered in accordance with DIN 3760 ➤*1042*|⧉ *6* and ➤*1042*|▦ *4*.

▦ *5*
Design of the shaft and housing bore

Sealing ring	Motion of shaft	Tolerance class of bore	Shaft		
			Tolerance class	Roughness	Hardness
G, GR, SD	Rotation only	G7 Ⓔ to R7 Ⓔ	g7 Ⓔ to k7 Ⓔ	0,2 ≦ Ramax ≦ 0,8	55 HRC or 600 HV
SD	Axial motion			Ramax 0,3	

1.7 Mounting and dismounting

Sealing rings must be handled and fitted correctly. This is the only way to ensure that they fulfil their sealing function correctly for a long period without problems.

Sealing lip orientation

Pay attention to the orientation of the seal lip:

- A seal lip facing outwards protects the bearing against the ingress of dust and contamination ➤*1044*|⧉ *8*.
- A seal lip facing inwards prevents the egress of lubricant from the bearing ➤*1044*|⧉ *8*

Sealing rings SD

In the case of sealing rings SD, the side with the protective lip is the marked side. If it should be relubricated from inside, the protective lip must face outwards.

8
Seal lip orientation

① *Seal lip facing outwards*
② *Sealing lip facing inwards*

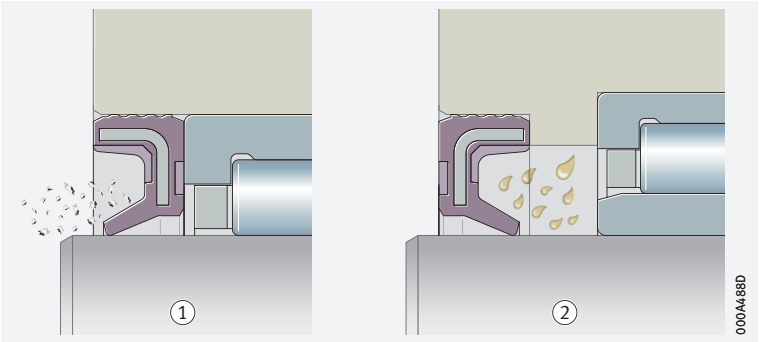

✎ *Mounting guidelines*

The running surface on the shaft and seal lip must be oiled or greased. This reduces the frictional energy during initial movement. In the case of sealing rings with an elastomer encased reinforcing ring – sealing ring G – the outside surface should be oiled before pressing in. This makes it easier to fit the seal in the housing.

✎ *Fitting tools*

Press sealing rings carefully into the housing bore using a pressing device and a suitable pressing tool ➤ *1044* | *9* and ➤ *1044* | *10*.

Ensure that the seal lip is not damaged. Cover any sharp-edged shaft ends, slots, teeth or threads by means of fitting sleeves. Fit sealing rings in such a way that the pressing-in force is applied as close as possible to the outside diameter.

9
Fitting using a pressing tool

① *Pressing tool (fitting mandrel)*

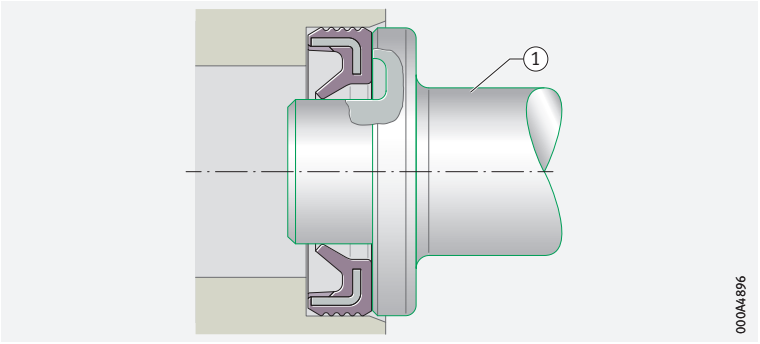

10
Fitting using a fitting sleeve

① *Fitting sleeve*

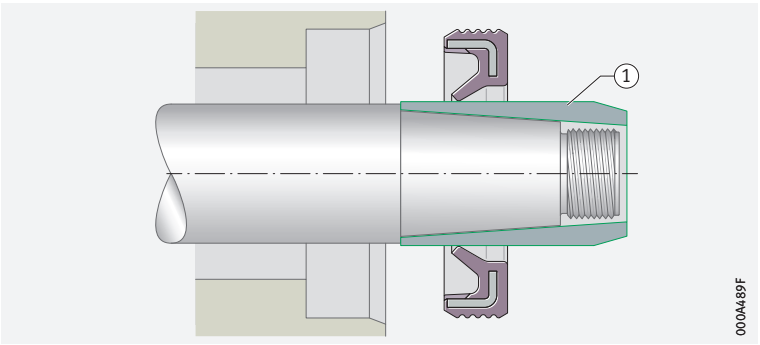

✎ *Pay attention to the perpendicular orientation of sealing rings*

Fit sealing rings perpendicular to the shaft axis and the housing bore. Do not exceed the maximum deviation in perpendicularity between the sealing ring and the shaft axis once fitted ➤ *1044* | *6*. Larger deviations will influence the sealing action.

6
Maximum perpendicularity deviation

Shaft diameter d mm	Maximum deviation mm
d < 25	0,1
d ≧ 25	0,2

✎ *Sealing ring SD*

In the case of sealing rings SD, the space between the seal lip and protective lip must be filled with grease.

✎ *Checking of function*

After fitting, allow the sealing rings to run in and check the sealing function. Slight leakage (forming a grease or liquid film) is desirable in order to lubricate the contact surface for the seal lips. The sealing action is aided by a grease collar.

✎ *Relubrication*

During relubrication, increase the pressure only slowly.

1.8 Legal notice regarding data freshness

✎ *The further development of products may also result in technical changes to catalogue products*

Of central interest to Schaeffler is the further development and optimisation of its products and the satisfaction of its customers. In order that you, as the customer, can keep yourself optimally informed about the progress that is being made here and with regard to the current technical status of the products, we publish any product changes which differ from the printed version in our electronic product catalogue.



We therefore reserve the right to make changes to the data and illustrations in this catalogue. This catalogue reflects the status at the time of printing. More recent publications released by us (as printed or digital media) will automatically precede this catalogue if they involve the same subject. Therefore, please always use our electronic product catalogue to check whether more up-to-date information or modification notices exist for your desired product.

Link to electronic product catalogue



The following link will take you to the Schaeffler electronic product catalogue: *https://medias.schaeffler.com*.



Sealing rings

Single lip or double lip

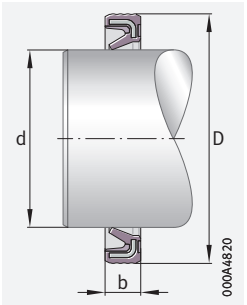

G
Single lip

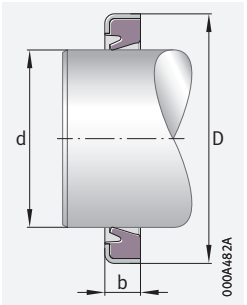

GR
Single lip

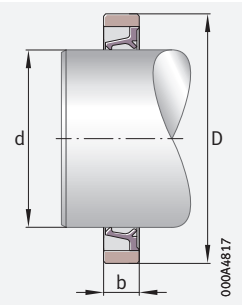

SD
Double lip

d = 4 – 80 mm

Sealing ring			Designation ➤*1042|1.4* ➤*1042|1.5*			Mass m Sealing ring		
G	GR	SD	d×	D×	b[1]	G ≈ g	GR ≈ g	SD ≈ g
	GR[2]		**4**	**8**	**2**		0,2	
	GR[2]		**5**	**9**	**2**		0,2	
	GR[2]		**5**	**10**	**2**		0,2	
	GR[2]		**6**	**10**	**2**		0,2	
	GR[2]		**6**	**12**	**2**		0,4	
	GR[2]		**7**	**11**	**2**		0,3	
	GR[2]		**7**	**14**	**2**		0,5	
G[2]	4)	4)	**8**	**12**	**3**	0,4		
G[2]	4)	**SD**[2]	**8**	**15**	**3**	0,7		0,3
G[2]	**GR**[2]	4)	**9**	**13**	**3**	0,5	0,5	
G[2]	4)	4)	**9**	**16**	**3**	0,7		
G[2]	**GR**[2]	4)	**10**	**14**	**3**	0,5	0,5	
G[2]	4)	**SD**[2]	**10**	**17**	**3**	0,9		0,4
G[2]	**GR**[2]	4)	**12**	**16**	**3**	0,6	0,6	
G[2]	4)	**SD**[2]	**12**	**18**	**3**	0,9		0,4
G[2]	**GR**[2]	**SD**[2]	**12**	**19**	**3**	1	1	0,5
G[2]	4)	4)	**13**	**19**	**3**	0,9		
G[2]	3)	**SD**[2]	**14**	**20**	**3**	1		0,5
G[2]	4)	4)	**14**	**21**	**3**	1,1		
G[2]	3)	**SD**[2]	**14**	**22**	**3**	1,3		0,7
G[2]	3)	**SD**[2]	**15**	**21**	**3**	1		0,5
G[2]	3)	**SD**[2]	**15**	**23**	**3**	1,3		0,7
G[2]	3)	**SD**[2]	**16**	**22**	**3**	1,3		0,6
G[2]	3)	**SD**[2]	**16**	**24**	**3**	1,3		0,7
G[2]	4)	4)	**16**	**25**	**3**	1,6		
G[2]	3)	**SD**[2]	**17**	**23**	**3**	1,3		0,6
G[2]	4)	**SD**[2]	**17**	**25**	**3**	1,5		0,8
G[2]	4)	**SD**[2]	**18**	**24**	**3**	1,2		0,6
G[2]	4)	**SD**[2]	**18**	**26**	**4**	1,8		1,1
G[2]	4)	**SD**[2]	**19**	**27**	**4**	2		1,1
G[2]	3)	**SD**[2]	**20**	**26**	**4**	1,8		0,8
G[2]	3)	**SD**[2]	**20**	**28**	**4**	2,1		1,1
G[2]	4)	4)	**21**	**29**	**4**	2,2		
G[2]	3)	**SD**[2]	**22**	**28**	**4**	1,8		0,9
G[2]	3)	**SD**[2]	**22**	**30**	**4**	2,2		1,3

Sealing ring			Designation ➤*1042|1.4* ➤*1042|1.5*			Mass m Sealing ring		
G	GR	SD	d×	D×	b[1]	G ≈ g	GR ≈ g	SD ≈ g
G[2]	3)	4)	**24**	**32**	**4**	2,5		
G[2]	3)	**SD**[2]	**25**	**32**	**4**	2,3		1,3
G[2]	4)	**SD**[2]	**25**	**33**	**4**	2,5		1,3
G[2]	3)	**SD**[2]	**25**	**35**	**4**	2,6		1,9
G[2]	4)	**SD**[2]	**26**	**34**	**4**	2,6		1,4
G[2]	3)	**SD**[2]	**28**	**35**	**4**	2,4		1,3
G[2]	3)	4)	**28**	**37**	**4**	3,1		
G[2]	4)	4)	**29**	**38**	**4**	3,2		
G[2]	3)	**SD**[2]	**30**	**37**	**4**	2,7		1,3
G[2]	3)	**SD**[2]	**30**	**40**	**4**	3,6		2,1
G[2]	4)	**SD**[2]	**32**	**42**	**4**	3,7		2,4
G[2]	4)	4)	**32**	**45**	**4**	5,1		
G[2]	3)	**SD**[2]	**35**	**42**	**4**	3		1,5
G[2]	4)	**SD**[2]	**35**	**45**	**4**	4,1		2,5
G[2]	4)	**SD**[2]	**37**	**47**	**4**	4		2,7
G[2]	4)	**SD**[2]	**38**	**48**	**4**	4,4		2,8
G[2]	4)	**SD**[2]	**40**	**47**	**4**	3,3		1,7
G[2]	3)	**SD**[2]	**40**	**50**	**4**	4,6		2,9
G[2]	3)	**SD**[2]	**40**	**52**	**5**	4,8		4,5
G[2]	3)	**SD**[2]	**42**	**52**	**4**	4,7		3
G[2]	4)	4)	**43**	**53**	**4**	4,8		
G[2]	3)	**SD**[2]	**45**	**52**	**4**	3,8		1,9
G[2]	3)	**SD**[2]	**45**	**55**	**4**	5,2		3,2
G[2]	3)	**SD**[2]	**50**	**58**	**4**	4,5		2,4
G[2]	3)	**SD**[2]	**50**	**62**	**5**	10,4		5,5
G[2]	3)		**55**	**63**	**5**	7,1		
G[2]	3)		**70**	**78**	**5**	9		
G[2]	4)		**80**	**90**	**5**	13,8		

medias *https://www.schaeffler.de/std/1F9A*

Special designs, available by agreement.

1) Width tolerance ±0,2.

2) **Standard range.**

3) Please request information on delivery capability.

4) Available by agreement for economically viable batch sizes.

Axial needle roller bearings



Matrix for bearing preselection 1109

1 Axial needle roller bearings 1110

1.1 Bearing design 1110
1.2 Load carrying capacity 1113
1.3 Compensation of angular misalignments 1113
1.4 Lubrication 1113
1.5 Sealing 1113
1.6 Speeds 1113

1.7 Noise *1114*
1.8 Temperature range *1114*
1.9 Cages *1114*
1.10 Internal clearance *1114*
1.11 Dimensions, tolerances *1115*
1.12 Suffixes *1115*
1.13 Structure of bearing designation *1116*
1.14 Dimensioning *1116*
1.15 Minimum load *1117*
1.16 Design of bearing arrangements *1117*
1.17 Mounting and dismounting *1118*
1.18 Legal notice regarding data freshness *1119*
1.19 Further information *1119*
Product tables *1120*
Axial needle roller and cage assemblies, axial bearing washers *1120*
Axial needle roller bearings with centring spigot *1122*

Matrix for bearing preselection

The matrix gives an overview of the types and design features.

It can be used to make a preliminary assessment of whether a bearing is fundamentally suitable for the envisaged application.

The additional information provided in the product chapter (see column "detailed information") and in the Technical principles must, however, be observed in addition to this overview in selection of the bearing.

Design features and suitability			Axial needle roller bearings	
+++ extremely suitable ++ highly suitable + suitable (+) suitable with restrictions – not suitable/not applicable ✓ available				detailed information ➤ **1110**
Load carrying capacity	radial		–	➤ *1113|1.2*
	axial, one direction		++	➤ *1113|1.2*
	axial, both directions		–	
	moments		–	
Compensation of angular misalignments	static		–	➤ *1113|1.3*
	dynamic		–	➤ *1113|1.3*
Bearing design	cylindrical bore		✓	➤ *1110|1.1*
	tapered bore		–	
	separable		✓	➤ *1110|1.1*
Lubrication	greased		–	➤ *1113|1.4*
Sealing	open		✓	➤ *1113|1.5*
	non-contact		–	
	contact		–	
Operating temperature in °C	from to		–20 +120	➤ *1114|1.8*
Suitability for	high speeds		++	➤ *1113|1.6*
	high running accuracy		–	➤ *1115|1.11* ➤ *115*
	low-noise running		+	➤ *1114|1.7* ➤ *27*
	high rigidity		+++	➤ *54*
	reduced friction		+++	➤ *56*
	length compensation within bearing		(+)	
	non-locating bearing arrangement		–	
	locating bearing arrangement		–	
X-life bearings			–	
Inner cage diameter D_{c1} in mm	from to		4 160	➤ *1120* ➤ *1122*
Product tables	from page ➤		**1120**	

1 Axial needle roller bearings

Axial needle roller bearings are particularly suitable where:

- high axial forces occur in one direction but no radial loads are present (the bearings may only be subjected to axial load ➤*1113*|*1.2*)
- the load carrying capacity of comparable axial deep groove ball bearings is no longer adequate and the very high axial load carrying capacity of axial cylindrical roller bearings is not yet necessary ➤*1110*|🗀 *1*
- higher speeds occur in addition to high axial loads
- the bearing arrangement must have very high axial rigidity
- the axial space available is extremely small ➤*1110*|🗀 *1*
- the bearing parts can or must be mounted separately
- the bearing arrangement is not configured but, for cost reasons, ready-to-fit standard bearings are to be used

For an overview of other product-specific features, see the Matrix for bearing preselection ➤*1109*.

🗀 **1**
Axial needle roller bearing and axial deep groove ball bearing – comparison of load carrying capacity and design envelope

F_a = *axial load*
C_a = *basic dynamic load rating*
D_w = *diameter of needle roller*
T = *axial section height of axial deep groove ball bearing*

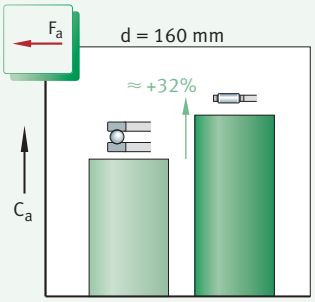

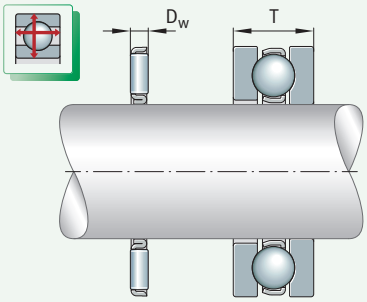

1.1 Bearing design

✎ *Design variants*

Axial needle roller bearings are available as:

- complete axial needle roller bearings (comprising a needle roller and cage assembly and axial bearing washers) ➤*1111*|🗀 *2*
- individual bearing parts for combination, comprising:
  - axial needle roller and cage assembly (prefix AXK)
  - axial bearing washers (prefix AS) ➤*1112*|🗀 *3*
- bearings with centring spigot (prefix AXW) ➤*1112*|🗀 *4* and ➤*1112*|🗀 *5*

Furthermore, Schaeffler supplies axial needle roller bearings by agreement for specific applications, for example with tabs to prevent rotation. Such bearings are used, due to their low axial section height, in applications such as automotive manual gearshift transmissions.

Axial needle roller bearings

Ready-to-fit bearing units with very small axial space

Axial needle roller bearings are part of the group of axial roller bearings. In contrast to the ball, the roller has a larger contact area perpendicular to the roller axis. As a result, it can transmit higher forces, has greater rigidity and allows smaller rolling element diameters under the same load. The single row, ready-to-fit bearings comprise flat, ribless axial bearing washers between which axial needle roller and cage assemblies are arranged ➤*1111*|*2*. Their axial section height corresponds only to the diameter of the needle rollers plus the thickness of the washers. Due to this design, the bearings are extremely small in axial height ➤*1122*|. The rolling elements are retained and guided by axial cages. The needle rollers are made from through hardened rolling bearing steel 100Cr6. They have a hardness of at least 670 HV and profiled ends, i.e. they have a slight lateral curvature towards the ends. The modified line contact between the needle rollers and raceways prevents damaging edge stresses. This in turn has a positive effect on the operating life of the bearings.

Due to the extensive possible combinations, the bearing parts for axial needle roller bearings are always supplied individually, i.e. the corresponding axial needle roller and cage assemblies and axial bearing washers in the product tables must always be ordered together ➤*1111*|*2*, ➤*1112*|*3*, ➤*1116*|*1.13* and ➤*1122*|.

2
Axial needle roller bearing

F_a = *axial load*

① *Axial bearing washers*
② *Axial needle roller and cage assembly*

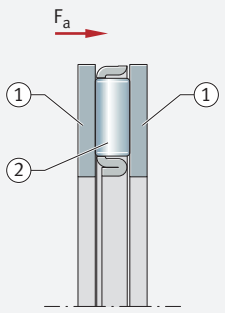

000A5476

Axial needle roller and cage assemblies

The axial section height corresponds to the needle roller diameter

Axial needle roller and cage assemblies AXK comprise geometrically stable plastic or metal cages fitted with a large number of needle rollers ➤*1111*|*2*. Due to the high uniformity of diameter (the needle rollers are sorted to very small diameter tolerances) of the needle rollers with each other, this gives very uniform loading of the rolling elements ➤*1115*|*3*. Since the axial section height of the cage assemblies is determined purely by the needle roller diameter, the bearings require only an extremely small axial design space.

Suitable as a direct bearing arrangement or in conjunction with axial bearing washers

The axial needle roller and cage assemblies are generally combined with axial bearing washers ➤*1111*|*2* and ➤*1112*|*3*. If they are to be used directly – i.e. without these washers – in the adjacent construction, the raceway for the needle rollers must be produced as a rolling bearing raceway ➤*1117*|*1.16*.

Axial bearing washers

Suitable as shaft or housing locating washers

Axial bearing washers AS are suitable for axial needle roller and cage assemblies AXK. They are punched, through hardened, polished and suitable for use as shaft or housing locating washers. Housing locating washers are externally centred, shaft locating washers are internally centred ➤*1112*|*3* and ➤*1117*|*1.16*. They are used if the adjacent machine parts cannot be used as a raceway for the rolling elements but are sufficiently rigid and geometrically precise.

The use of complete axial needle roller bearings (axial needle roller and cage assembly AXK with axial bearing washers AS) is only appropriate, for example, if high speeds occur and the bearing washers must therefore be precisely centred or the running surfaces for the rolling elements cannot be configured as a rolling bearing raceway.

3
Axial bearing washers

① *Axial needle roller bearing, housing locating washer externally centred*
② *Axial needle roller bearing, shaft locating washer internally centred*

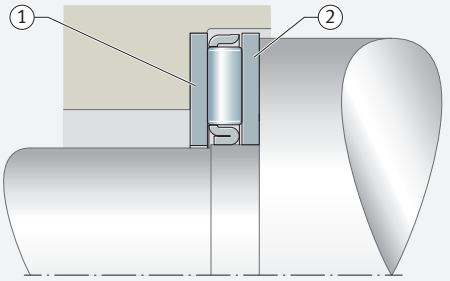

Axial bearings with centring spigot

The centring spigot gives simplified mounting of the bearings

Axial needle roller bearings AXW comprise a housing locating washer with a centring spigot into which an axial needle roller and cage assembly AXK is inserted. With the aid of the centring spigot, the housing locating washer can be precisely centred in the housing bore. This gives easier mounting of the bearings. The running surface for the needle roller and cage assembly must be produced as a rolling bearing raceway, i. e. it must be hardened and ground.

Suitable for the support of axial loads only

Axial bearings with a centring spigot can only support axial loads in one direction. In order to support combined radial/axial loads, however, these bearings can be combined with the following radial needle roller bearings:

- drawn cup needle roller bearings with open ends and with closed end (direct bearing arrangement) ➤ *1112* | *4*
- needle roller bearings with or without inner ring ➤ *1112* | *5*

Such combinations give very compact and economical bearing arrangements.

4
Needle roller axial bearings with centring spigot, combined with drawn cup needle roller bearings with open ends

F_a = *axial load*
F_r = *radial load*

① *Needle roller axial bearing AXW*
② *Drawn cup needle roller bearing with open endsHK (radial bearing)*
③ *Axial bearing washer AS*

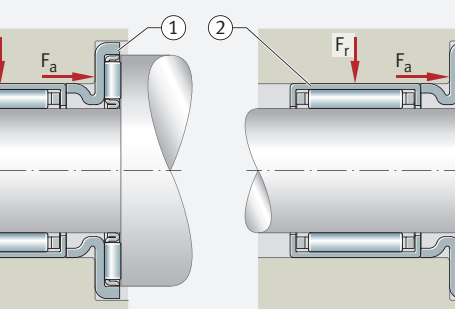

5
Needle roller axial bearings with centring spigot, combined with needle roller bearings

F_a = *axial load*
F_r = *radial load*

① *Needle roller axial bearing AXW*
② *Needle roller bearing without inner ring (radial bearing)*
③ *Needle roller bearing with inner ring (radial bearing)*

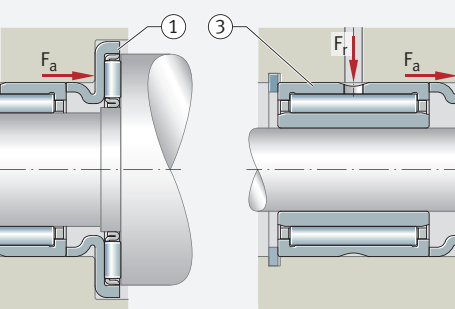

1.2 Load carrying capacity

For high axial loads acting in one direction

Single row axial needle roller bearings can support high axial loads as well as axial shock loads in one direction, but must not be subjected to radial load ➤*1116*|*1.14*. Radial loads must be supported by means of an additional bearing ➤*1112*|🗀*4* and ➤*1112*|🗀*5*.

1.3 Compensation of angular misalignments

The bearings do not permit any skewing between the shaft and housing. If angular misalignments occur between the locating surfaces on the shaft and in the housing, this will cause damage to the bearing and a reduction in its operating life.

1.4 Lubrication

Oil or grease lubrication is possible

Axial needle roller bearings and axial needle roller and cage assemblies are not greased. The bearings must be lubricated with oil or grease.

Compatibility with plastic cages

When using bearings with plastic cages, compatibility between the lubricant and the cage material must be ensured if synthetic oils, lubricating greases with a synthetic oil base or lubricants containing a high proportion of EP additives are used.

If there is any uncertainty regarding the suitability of the selected lubricant for the application, please consult Schaeffler or the lubricant manufacturer.

Observe oil change intervals

Aged oil and additives in the oil can impair the operating life of plastics at high temperatures. As a result, stipulated oil change intervals must be strictly observed.

1.5 Sealing

Provide seals in the adjacent construction

The bearings are not sealed; i. e. sealing of the bearing position must be carried out in the adjacent construction. This must reliably prevent:

- moisture and contaminants from entering the bearing
- the egress of lubricant from the bearing position

1.6 Speeds

Speeds in the product tables

The product tables generally give two speeds for the bearings:

- the kinematic limiting speed n_G
- the thermal speed rating $n_{\vartheta r}$

Limiting speeds

The limiting speed n_G is the kinematically permissible speed of the bearing. Even under favourable mounting and operating conditions, this value should not be exceeded without prior consultation with Schaeffler ➤*64*.

The values in the product tables are valid for oil lubrication.

Values for grease lubrication

For grease lubrication, 25% of the value stated in the product tables is permissible in each case.

Reference speeds

$n_{\vartheta r}$ is used to calculate n_ϑ

The thermal speed rating $n_{\vartheta r}$ is not an application-oriented speed limit, but is a calculated ancillary value for determining the thermally safe operating speed n_ϑ ➤*64*.

1.7 Noise

Schaeffler Noise Index

The Schaeffler Noise Index (SGI) is not yet available for this bearing type ➤69. The data for these bearing series will be introduced and updated in stages.

Further information:

- ***medias*** *https://medias.schaeffler.com*

1.8 Temperature range

Limiting values

The operating temperature of the bearings is limited by:

- the dimensional stability of the bearing washers and needle rollers
- the cage
- the lubricant

Possible operating temperatures of axial needle roller bearings ➤1114|1.

1 *Permissible temperature ranges*

Operating temperature	Corrosion-resistant design (with Corrotect coating) or polyamide PA66	Bearings with sheet steel cage
	–20 °C to +120 °C	–20 °C to +120 °C

In the event of anticipated temperatures which lie outside the stated values, please contact Schaeffler.

1.9 Cages

The standard cages are made from sheet steel

Standard cages ➤1114|2. Other cage designs are available by agreement. With such cages, however, suitability for high speeds and temperatures as well as the basic load ratings may differ from the values for the bearings with standard cages.

For high continuous temperatures and applications with difficult operating conditions, bearings with sheet metal cages should be used. If there is any uncertainty regarding cage suitability, please consult Schaeffler.

2 *Cage, cage suffix, inner cage diameter*

Bearing series	Solid cage made from polyamide PA66 TV	Sheet steel cage	Corrosion-resistant design (with Corrotect coating) RR
	Inner cage diameter		
AXK	up to 8	from 10	Available by agreement
AXW	–	from 10	Available by agreement

1.10 Internal clearance

Axial clearance and preload are determined by the application

In the case of axial needle roller bearings, the internal clearance (axial clearance) is only achieved when the bearings are mounted. The requisite axial clearance of the bearing arrangement is dependent on the application and must take account of the conditions in the bearing arrangement while warm from operation and subjected to load. If axial needle roller bearings are subjected to vibrations while under predominantly static load, for example, they must be lightly preloaded. Preload can be applied, for example, using calibrated sheets (shims). Other suitable means include shaft nuts, disc springs etc. ➤1117|1.15. It must always be ensured that no slippage occurs in operation between the rolling elements and raceways ➤1117|1.15.

If there is any uncertainty regarding correct setting, please consult Schaeffler.

1.11 Dimensions, tolerances

Dimension standards

The main dimensions of axial needle roller bearings correspond to ISO 104:2015. The main dimensions of axial needle roller and cage assemblies correspond to DIN 5405-2:2016, while those of axial bearing washers correspond to DIN 5405-3:2016. Axial needle roller bearings with centring spigot are not standardised.

Tolerances

Axial bearing washers adapt to the accuracy of the abutment surface. They are flat under a minimum concentric load of 200 N.

Tolerances for the bore and outside diameter as well as for the width of the bearing parts ➤1115|3 and ➤1115|6.

The sort tolerances and sort intervals of the needle roller diameters correspond to ISO 3096:1996 or DIN 5402-3:2012, grade G2.

The diameter sort tolerance of the needle rollers in the axial needle roller and cage assemblies AXW is 2 µm.

3 *Tolerances of bearing parts*

Series	Bore		Outside diameter		Height	
		Tolerance class		Tolerance class		Deviations mm
AXK	D_{c1}	E11	D_c	c12	D_w	0 −0,01
AXW	D_{c1}	E12	–	–	B	0 −0,2
AS	d	E12	D	e12	B_1	±0,05

6 *Bearing parts*

① *Axial needle roller and cage assembly AXK*
② *Axial needle roller bearing AXW*
③ *Axial bearing washer AS*

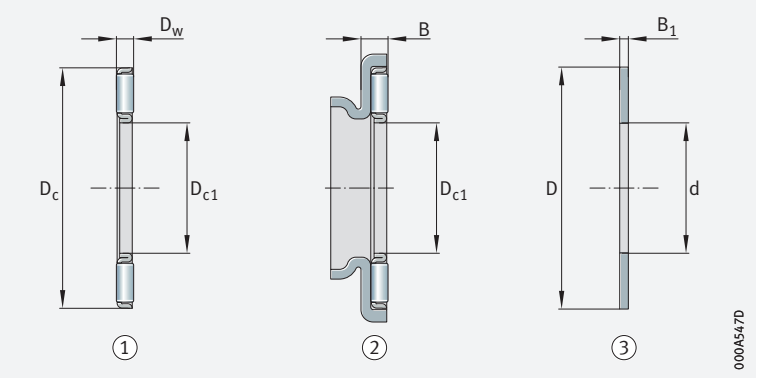

1.12 Suffixes

Suffixes describe the design and features of a bearing in more detail.

4 *Suffixes and corresponding descriptions*

Suffix	Description of suffix	
RR	Corrosion-resistant design, with Corrotect coating	Special design, available by agreement
TV	Plastic cage made from glass fibre reinforced polyamide PA66	Standard

1.13 Structure of bearing designation

With ***medias*** interchange, equivalent Schaeffler bearing designations can be determined for bearing designations from other rolling bearing manufacturers *https://www.schaeffler.de/std/1B69*.

Examples of composition of bearing designation

The designation of bearings follows a set model. Examples ➤*1116*|*7* and ➤*1116*|*8*. The composition of designations for axial needle roller and cage assemblies and axial bearing washers is subject to DIN 623-1 ➤*102*|*10*.

7
Axial needle roller bearing, comprising axial needle roller and cage assembly and axial bearing washers

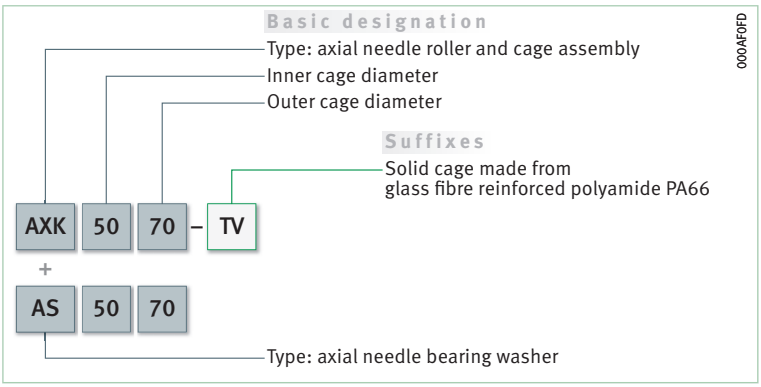

8
Axial needle roller bearing with centring spigot, combined with axial bearing washer and drawn cup needle roller bearing with open ends

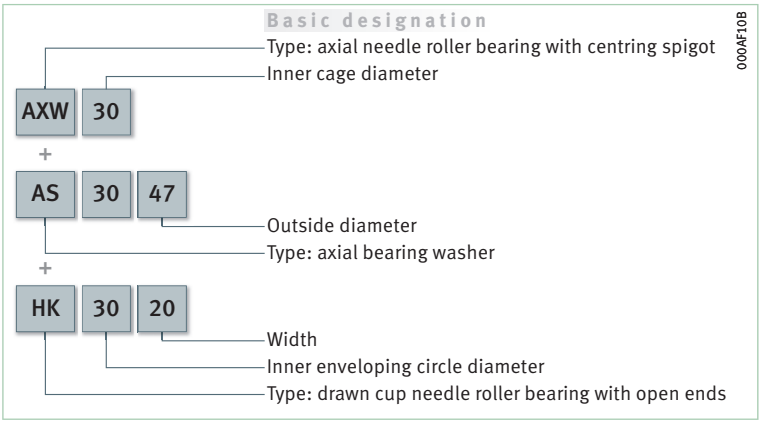

1.14 Dimensioning

Equivalent dynamic bearing load

Axial needle roller bearings can only support axial forces ➤*1113*|*1.2*. In the rating life equation, P is therefore substituted by the value for F_a ➤*1116*|*1*.

1
Equivalent dynamic load

$$P = F_a$$

Legend

P	N	Equivalent dynamic bearing load
F_a	N	Axial load.

Equivalent static bearing load

Combined loads are not possible

In relation to the direction of load, the same conditions apply as for the equivalent dynamic bearing load, i.e. combined loads are not permissible. In the rating life equation, P_0 is therefore substituted by the value for F_{0a} ➤*1117*|*2*.

*f*2
Equivalent static load

$$P_0 = F_{0a}$$

Legend

P_0	N	Equivalent static bearing load
F_{0a}	N	Largest axial load present (maximum load).

Static load safety factor

✎ *$S_0 = C_0/P_0$*

In addition to the basic rating life L (L_{10h}), it is also always necessary to check the static load safety factor S_0 ➤*1117*| *f*3.

*f*3
Static load safety factor

$$S_0 = \frac{C_0}{P_0}$$

Legend

S_0	–	Static load safety factor
C_0	N	Basic static load rating
P_0	N	Equivalent static bearing load.

1.15 Minimum load

✎ *Rolling bearings under low loads are particularly prone to slippage*

In order to prevent slippage damage, the bearing must be subjected to a minimum axial load $F_{a\,min}$ ➤*1117*| *f*4. In vertical bearing arrangements in particular, the requisite minimum axial load $F_{a\,min}$ is normally achieved, however, simply by the weight of the bearing parts and the external forces. If this is not the case, the bearing arrangement must be preloaded, for example by means of springs or a shaft nut ➤*1114*|*1.10*.

*f*4
Minimum axial load

$$F_{a\,min} = 0{,}0005 \cdot C_{0a} + k_a \left(\frac{C_{0a} \cdot n}{10^8} \right)^2$$

Legend

$F_{a\,min}$	N	Minimum axial load
C_{0a}	N	Basic static load rating, axial
k_a	–	Factor for determining the minimum load; $k_a = 3$
n	min^{-1}	Speed.

1.16 Design of bearing arrangements

Design of adjacent parts

Axial needle roller bearings cannot tolerate angular misalignments ➤*1113*|*1.3*. The locating surfaces for the bearing parts on the shaft and in the housing must therefore be vertical to the shaft axis, while the adjacent parts must be rigid and flat. They must be configured such that the bearing washers are supported as far as possible over the whole circumference and over the whole raceway width.

Running surfaces of rolling elements in direct bearing arrangements with needle roller and cage assemblies

✎ *Produce the running surfaces as a rolling bearing raceway*

For the very smallest axial design space, axial needle roller and cage assemblies can also run directly (i.e. without axial bearing washers) on the adjacent construction. In this case – and if the load carrying capacity of the axial needle roller and cage assemblies is to be fully utilised – the raceways on the shaft and in the housing must be produced as a rolling bearing raceway or must correspond to the quality and hardness of axial bearing washers. When designing the raceway on the shaft and in the housing, the raceway dimensions E_a and E_b of axial needle roller and cage assemblies must be observed ➤*1120*|▦. If the values are observed, this will ensure that the raceways for the needle rollers – taking account of any possible axial offset of the needle roller and cage assembly – are adequately dimensioned.

✎ *Raceway design*

Design of running surfaces:

- raceway hardness 670 HV to 840 HV
- radial cage guidance surfaces Ramax 0,8 (Rzmax 4)
- surface hardening depth SHD ≧ 140 · $D_w/R_{p0,2}$
  - SHD = surface hardening depth in mm
  - D_w = rolling element diameter in mm
  - $R_{p0,2}$ = proof stress in N/mm²
- roughness Ramax 0,2 (Rzmax 1)
- raceway dimensions E_a and E_b according to the product tables must be observed
- total axial runout tolerances to ISO tolerance grade IT5 (for special requirements IT4) relative to the inside diameter of the axial needle roller and cage assemblies D_{c1} must be observed

Tolerances for shaft and housing bore

Proven tolerances are given in ➤*1118*|▦ *5*. If the data are observed, this will give correct radial guidance of the bearing elements.

▦ **5**
Tolerances for shafts and housing bores

Bearing component		Tolerance class[1] for	
		Shaft	Bore
AXK	Shaft guided	h8	–
AS	Externally centred as housing locating washer	Shaft released	H9
	Internally centred as shaft locating washer	h8	Bore released

[1] *The envelope requirement Ⓔ applies.*

✎ *Tolerances for the centring spigot in the housing bore*

Where axial needle roller bearings AXW are to be combined with drawn cup needle roller bearings with open ends or closed end, or with needle roller bearings, the bore tolerances selected for the bore of the centring spigot in the housing must be the same as for the radial bearings ➤*1110*|*1.1*, ➤*1112*|⧉ *4* and ➤*1112*|⧉ *5*.

Release and guidance of bearing parts

✎ *Release of shaft and housing locating washers*

If the bearing washers are centred on the shaft, they must have radial clearance in the housing bore while, if they are centred in the housing, there must be radial clearance between the washer bore and the shaft ➤*1118*|▦ *5*.

✎ *Guidance of axial needle roller and cage assemblies*

In order to achieve the lowest possible sliding speeds on the guidance surfaces, the axial needle roller and cage assemblies are generally guided on the shaft. This is particularly important in the case of high speeds.

1.17 Mounting and dismounting

The mounting and dismounting options for the bearings must be taken into consideration in the design of the bearing position.

✎ *As the bearings are not self-retaining, they are easy to mount*

Axial needle roller bearings are not self-retaining. As a result, the bearing parts can be mounted separately from each other. This gives simplified mounting of the bearings.

✎ *Mounting position of bearing washers*

The axial bearing washers AS must be suitable as a raceway on both sides, i.e. either side of the washer can face towards the needle rollers.

Schaeffler Mounting Handbook

Rolling bearings must be handled with great care

Rolling bearings are well-proven precision machine elements for the design of economical and reliable bearing arrangements, which offer high operational security. In order that these products can function correctly and achieve the envisaged operating life without detrimental effect, they must be handled with care.

The Schaeffler Mounting Handbook MH 1 gives comprehensive information about the correct storage, mounting, dismounting and maintenance of rotary rolling bearings *https://www.schaeffler.de/std/1D53*. It also provides information which should be observed by the designer, in relation to the mounting, dismounting and maintenance of bearings, in the original design of the bearing position. This book is available from Schaeffler on request.

1.18 Legal notice regarding data freshness

The further development of products may also result in technical changes to catalogue products

Of central interest to Schaeffler is the further development and optimisation of its products and the satisfaction of its customers. In order that you, as the customer, can keep yourself optimally informed about the progress that is being made here and with regard to the current technical status of the products, we publish any product changes which differ from the printed version in our electronic product catalogue.

We therefore reserve the right to make changes to the data and illustrations in this catalogue. This catalogue reflects the status at the time of printing. More recent publications released by us (as printed or digital media) will automatically precede this catalogue if they involve the same subject. Therefore, please always use our electronic product catalogue to check whether more up-to-date information or modification notices exist for your desired product.

Link to electronic product catalogue

The following link will take you to the Schaeffler electronic product catalogue: *https://medias.schaeffler.com*.

1.19 Further information

In addition to the data in this chapter, the following chapters in Technical principles must also be observed in the design of bearing arrangements:

- Determining the bearing size ➤*34*
- Rigidity ➤*54*
- Friction and increases in temperature ➤*56*
- Speeds ➤*64*
- Bearing data ➤*97*
- Lubrication ➤*70*
- Sealing ➤*185*
- Design of bearing arrangements ➤*141*
- Mounting and dismounting ➤*194*

Axial needle roller and cage assemblies
Axial bearing washers

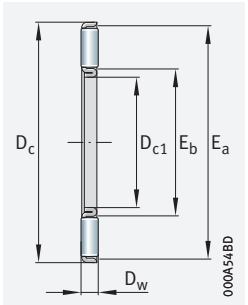

AXK

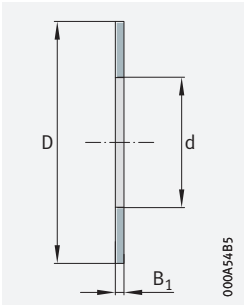

AS

D_{c1} = 4 – 160 mm

Main dimensions				Basic load ratings		Fatigue limit load	Limiting speed	Speed rating
D_{c1} d	D_c D	D_w	B_1	dyn. C_a N	stat. C_{0a} N	C_{ua} N	n_G min^{-1}	$n_{\vartheta r}$ min^{-1}
4	14	2	1	4 400	8 000	960	21 500	15 100
5	15	2	1	4 750	9 200	1 090	20 600	13 100
6	19	2	1	6 800	15 500	1 610	18 900	11 000
8	21	2	1	7 800	19 400	2 010	17 800	8 900
10	24	2	1	9 200	25 500	2 550	16 900	7 400
12	26	2	1	9 900	29 000	2 950	15 200	6 500
15	28	2	1	11 300	36 000	3 650	13 200	4 950
17	30	2	1	11 900	39 500	4 000	12 100	4 500
20	35	2	1	13 100	46 500	4 800	10 500	4 350
25	42	2	1	14 700	58 000	6 000	8 400	3 700
30	47	2	1	16 300	70 000	7 200	7 300	3 100
35	52	2	1	17 800	81 000	8 400	6 500	2 700
40	60	3	1	28 000	114 000	12 100	5 600	2 340
45	65	3	1	30 000	128 000	13 600	5 100	2 100
50	70	3	1	32 000	143 000	15 100	4 700	1 890
55	78	3	1	38 000	186 000	20 700	4 250	1 730
60	85	3	1	44 500	234 000	27 000	3 900	1 550
65	90	3	1	46 500	255 000	29 000	3 650	1 430
70	95	4	1	54 000	255 000	27 000	3 450	1 400
75	100	4	1	55 000	265 000	28 500	3 250	1 340
80	105	4	1	56 000	280 000	30 000	3 100	1 260
85	110	4	1	58 000	290 000	31 000	2 950	1 200
90	120	4	1	73 000	405 000	45 000	2 700	1 100
100	135	4	1	91 000	560 000	59 000	2 420	970
110	145	4	1	97 000	620 000	64 000	2 230	880
120	155	4	1	102 000	680 000	69 000	2 070	800
130	170	5	1	133 000	840 000	77 000	1 900	750
140	180	5	1	138 000	900 000	80 000	1 780	700
150	190	5	1	143 000	960 000	84 000	1 680	660
160	200	5	1	148 000	1 020 000	88 000	1 590	620

medias *https://www.schaeffler.de/std/1F9A*

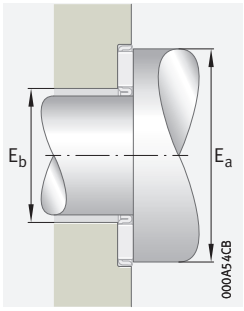

Mounting dimensions/raceway dimensions for direct bearing arrangement

	Axial needle roller and cage assemblies		Axial bearing washers		Raceway dimensions	
	Mass	Designation ➤*1115|1.12* ➤*1116|1.13*	Mass	Designation ➤*1115|1.12* ➤*1116|1.13*		
d D_{c1}	m ≈ g		m ≈ g		E_b	E_a
4	0,7	**AXK0414-TV**	1	**AS0414**	5	13
5	0,8	**AXK0515-TV**	1	**AS0515**	6	14
6	1	**AXK0619-TV**	2	**AS0619**	7	18
8	2	**AXK0821-TV**	2	**AS0821**	9	20
10	3	**AXK1024**	3	**AS1024**	12	23
12	3	**AXK1226**	3	**AS1226**	14	25
15	4	**AXK1528**	3	**AS1528**	17	27
17	4	**AXK1730**	4	**AS1730**	19	29
20	5	**AXK2035**	5	**AS2035**	22	34
25	7	**AXK2542**	7	**AS2542**	29	41
30	8	**AXK3047**	8	**AS3047**	34	46
35	10	**AXK3552**	9	**AS3552**	39	51
40	16	**AXK4060**	12	**AS4060**	45	58
45	18	**AXK4565**	13	**AS4565**	50	63
50	20	**AXK5070**	14	**AS5070**	55	68
55	28	**AXK5578**	18	**AS5578**	60	76
60	33	**AXK6085**	22	**AS6085**	65	83
65	35	**AXK6590**	24	**AS6590**	70	88
70	60	**AXK7095**	25	**AS7095**	74	93
75	61	**AXK75100**	27	**AS75100**	79	98
80	63	**AXK80105**	28	**AS80105**	84	103
85	67	**AXK85110**	29	**AS85110**	89	108
90	86	**AXK90120**	39	**AS90120**	94	118
100	104	**AXK100135**	50	**AS100135**	105	133
110	122	**AXK110145**	55	**AS110145**	115	143
120	131	**AXK120155**	59	**AS120155**	125	153
130	205	**AXK130170**	65	**AS130170**	136	167
140	219	**AXK140180**	79	**AS140180**	146	177
150	232	**AXK150190**	84	**AS150190**	156	187
160	246	**AXK160200**	89	**AS160200**	166	197

Axial needle roller bearings

With centring spigot

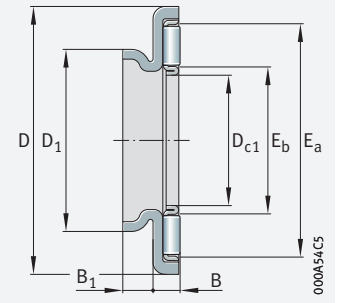

AXW

D_{c1} = 10 – 50 mm

Main dimensions			Basic load ratings		Fatigue limit load	Limiting speed	Speed rating	Mass	Designation
D_{c1}	D	B	dyn. C_a N	stat. C_{0a} N	C_{ua} N	n_G min^{-1}	$n_{\vartheta r}$ min^{-1}	m ≈ g	➤*1115|1.12* ➤*1116|1.13*
10	27	3,2	9 200	25 500	2 550	16 900	9 300	8,3	**AXW10**
12	29	3,2	9 900	29 000	2 950	15 200	8 100	9,1	**AXW12**
15	31	3,2	11 300	36 000	3 650	13 200	6 200	10	**AXW15**
17	33	3,2	11 900	39 500	4 000	12 100	5 600	11	**AXW17**
20	38	3,2	13 100	46 500	4 800	10 500	5 300	14	**AXW20**
25	45	3,2	14 700	58 000	6 000	8 400	4 350	20	**AXW25**
30	50	3,2	16 300	70 000	7 200	7 300	3 650	22	**AXW30**
35	55	3,2	17 800	81 000	8 400	6 500	3 150	27	**AXW35**
40	63	4,2	28 000	114 000	12 100	5 600	2 700	39	**AXW40**
45	68	4,2	30 000	128 000	13 600	5 100	2 400	43	**AXW45**
50	73	4,2	32 000	143 000	15 100	4 700	2 160	49	**AXW50**

medias *https://www.schaeffler.de/std/1F9A*

Combination with radial needle roller bearings, drawn cup needle roller bearings with open ends, drawn cup needle roller bearings with closed end

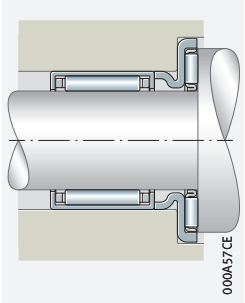

AXW with HK

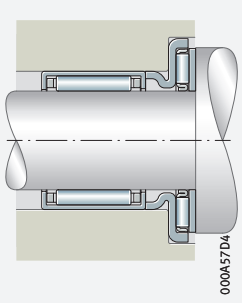

AXW with AS and HK

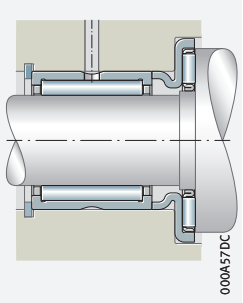

AXW with NK, NKS, RNA49, RNA69

Dimensions			Raceway dimensions		Axial bearing washers ➤1120	Drawn cup needle roller bearings with open ends		Drawn cup needle roller bearings with closed end	Needle roller bearings	
D_{c1}	D_1	B_1	E_b	E_a	AS	HK	HK..-RS	BK	NK, NKS, RNA49, RNA69	NKI, NKIS, NA49, NA69
10	14	3	12	23	AS1024	HK1010 HK1012 HK1015	–	BK1010 BK1012 BK1015	NK7/10-TV NK7/12-TV	–
12	16	3	14	25	AS1226	HK1210	–	BK1210	NK9/12-TV NK9/16-TV	NKI6/12-TV NKI6/16-TV
15	21	3,5	17	27	AS1528	HK1512 HK1516 HK1522-ZW	HK1514-RS	BK1512 BK1516	–	–
17	23	3,5	19	29	AS1730	HK1712	–	–	NK15/16 NK15/20	–
20	26	3,5	22	34	AS2035	HK2012 HK2016 HK2020 HK2030-ZW	HK2018-RS	BK2016 BK2020	NK18/16 NK18/20	–
25	32	4	29	41	AS2542	HK2512 HK2516 HK2520 HK2526 HK2538-ZW	HK2518-RS	BK2520 BK2526 BK2538-ZW	NK24/16 NK24/20 NKS20	NKI20/16 NKI20/20
30	37	4	34	46	AS3047	HK3012 HK3016 HK3020 HK3026 HK3038-ZW	HK3018-RS	BK3012 BK3016 BK3020 BK3026 BK3038-ZW	NK28/20 NK28/30 NKS24 RNA4904 RNA6904	NA4904 NA6904
35	42	4	39	51	AS3552	HK3512 HK3516 HK3520	HK3518-RS	BK3520	NK32/20-TV NK32/30 NKS28 RNA4905 RNA6905	NKIS20 NA4905 NA6905 NKI28/20-TV NKI28/30
40	47	4	45	58	AS4060	HK4012 HK4016 HK4020	HK4018-RS	BK4020	NK37/20 NK37/30 NKS32 RNA4906 RNA6906	NKIS25 NA4906 NA6906 NKI32/20 NKI32/30
45	52	4	50	63	AS4565	HK4516 HK4520	HK4518-RS	BK4520	NK42/20 NK42/30 NKS37 RNA49/32 RNA69/32-ZW	NKIS30 NA49/32 NA69/32-ZW
50	58	4,5	55	68	AS5070	HK5020 HK5025	HK5022-RS	–	NKS43	NKIS35

تأمین‌کننده تخصصی بلبرینگ و رولبرینگ

BEARINGS · SEALS · BELTS · POWER TRANSMISSION

بلبرینگ | رولبرینگ | کاسه نمد | تسمه | اورینگ | یاتاقان | پکینگ | گریس

وب‌سایت	moharekcharkhesh.com
تلفن	021 3399 8121 · 021 3399 8100
همراه	0912 464 6470
ایمیل	MoharekCharkhesh@proton.me
آدرس	تهران، خیابان امیرکبیر، کوچه ناظم‌الاطبا شمالی، پاساژ تهران، طبقه سوم، پلاک ۱۴۲
ساعت کاری	شنبه تا پنج‌شنبه، ۹:۰۰ تا ۱۸:۰۰

SCAN TO VISIT

تماس با کارشناس فروش

مشاهده محصولات در سایت

برای استعلام قیمت، اعلام موجودی و ثبت سفارش تکی و عمده بلبرینگ INA با کارشناسان محرک چرخش تماس بگیرید.

© Moharek Charkhesh — INA catalogue, distributed for reference

تمامی حقوق کاتالوگ متعلق به سازنده INA است